Assembly · Industrial · Precision Fastening · Automation

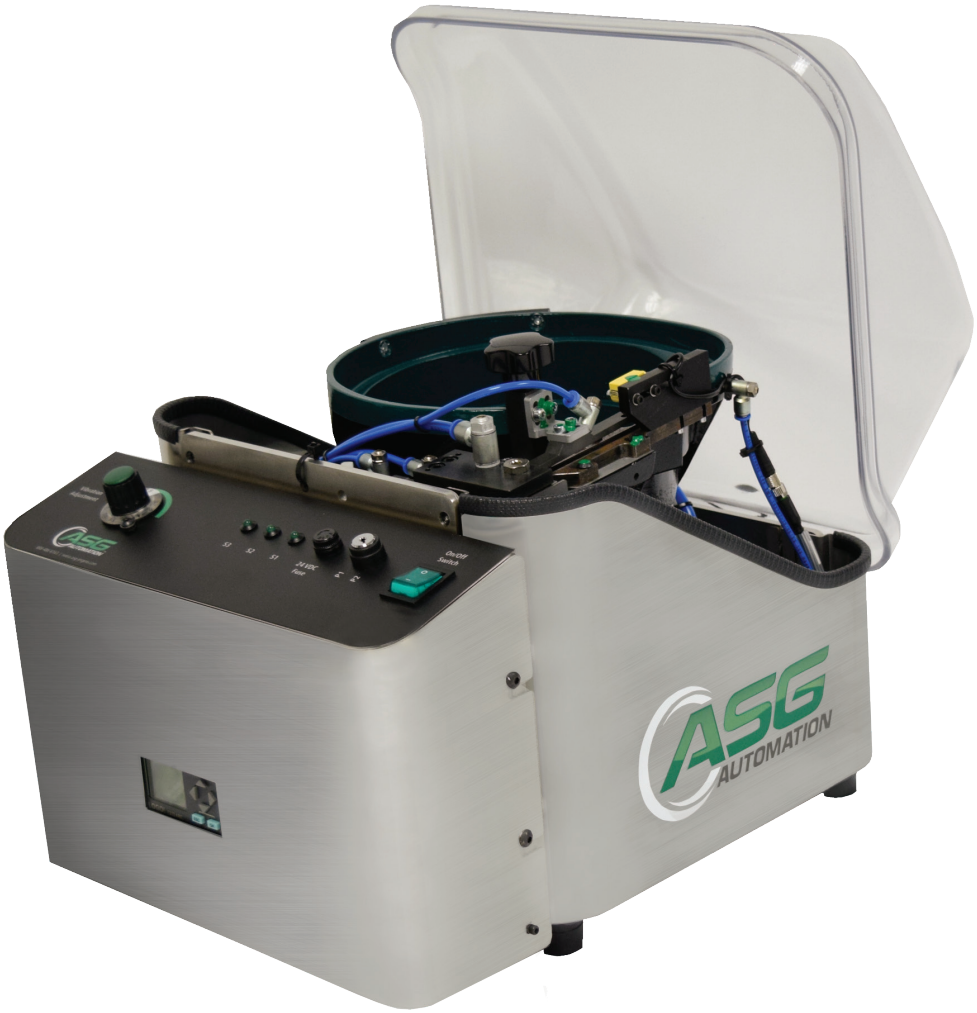

Premium Auto Feed System Manual

Products and Solutions for Assembly

About ASG

We are personally committed to understanding and exceeding our customers' requirements. We are committed to continuously improving our products and processes.

We are dedicated to delivering products, services, and solutions on time and at a competitive value.

ASG, Division of Jergens, Inc. is an ISO 9001:2008 certified manufacturer, provider and service center for products and solutions focused around assembly. Since the 1970s, we have developed a first-class reputation unrivaled in the industry offering a wide range of world class products through our various world wide locations.

We offer a wide selection of products including: electric, pneumatic and manual torque control screwdrivers; torque and angle control precision fastening systems; automatic screw feeders and screw presenters; torque testers and calibration services; custom designed automation equipment as well as a full line of accessories.

ASG also offers a selection of value-added products and solutions including engineering and consulting services, financing, and extended protection and maintenance plans.

Industry Commitment

ASG is committed to the highest quality standards, ensuring that all processes and procedures are followed to produce the best products for our customers. We maintain ISO 9001:2008 certification for the manufacture, distribution, and service of assembly tools. Maintaining membership in key industry organizations in order to stay abreast of the most current industry trends and information is vital to serving our customers.

Automation Product Group

When it comes to automated feeding and fastening, ASG is your single source solution; providing robotics, auto feed and sequence recognition systems; driven by our award winning screwdrivers and nutrunners. ASG offers custom engineered products for integration into assembly systems and uniquely tailored solutions for complex applications. Accelerate your assembly with ASG Automation.

Table of Contents

Section 1: Introduction

Symbols

Symbols Relating to Notices

IMPORTANT:
Texts highlighted by this symbol indicate a potential danger for the machine and draw attention to the damage that such danger may cause to the machine and/or to the operator.

TO SAFEGUARD THE ENVIRONMENT:
Texts highlighted by this symbol contain warnings relating to the environment.

NOTE:
Texts highlighted by this symbol contain additional information

Symbols Relating to Hazards

Fire Hazard: This symbol means that the operator must pay particular attention since there is a risk arising out of explosive material.

Danger of Hot Surfaces: This symbol instructs operators to pay particular attention to risk of contact with hot parts.

Danger of Hand/Arm and Leg/Foot Crushing: This symbol instructs operators to pay particular attention towards mechanical components that could cause hand/arm and leg/foot crushing in the event of unexpected movements or imprudent maneuverer of the operators themselves.

Danger of Entanglement: This symbol instructs operators to pay particular attention towards mechanical components that could cause entanglement in the event of unexpected movements or imprudent maneuverer of the operators themselves.

Beware of Suspended Loads: This symbol warns operators of the danger of suspended loads, which may arise when parts of the machine are lifted.

Danger of Electrocution: This symbol warns staff involved of the risk of electrocution if the operation described is not carried out in compliance with safety regulations.

Introduction

Symbols (Continued)

Danger of Slipping: This symbol warns operators the danger of slipping due to oil or grease on the floor near the machine.

Danger of Moving Forklift Trucks: This symbol warns operators the danger of forklift trucks moving near the machine.

General Information

IMPORTANT:
Before carrying out any operations on the machine, the trained operators and technicians must carefully read the instructions contained in this manual (and attached documents) and follow them while carrying out the various operations. If you have any doubts concerning the interpretation of these instructions, call ASG Customer Service for the necessary explanation.

This manual contains information concerning installation, use, supervision and maintenance of the machine described.

This manual is an integral part of the machine and must be kept throughout the entire service life for future consultation. If your copy of the manual becomes unreadable, contact ASG.

ASG Division of Jergens Inc.
Jergens Way
15700 S. Waterloo Rd
Cleveland, OH 44110
Phone: 888-486-6163 | Fax: 216-481-4519 | asginfo@asg-jergens.com

Specify the machine type and the serial number printed on the machine's nameplate.

The manufacturer reserves the right to update its products and manuals without notification or consent to the purchaser or end user.

The Customer Service Department is available to provide assistance at 888-486-6163 Monday through Friday 8am - 5pm EST.

General Information (Continued)

General Information Relating to Machine Use

- This manual has been written to provide instructions for the maintenance and operation of this machine
- Before performing any maintenance or operating this machine, please read this manual carefully as it contains all the information required to use the machine correctly and to prevent accidents
- The frequency of the inspection and maintenance procedures prescribed in the manual is the minimum necessary for ensuring the efficiency, safety and long life of the machine under normal operating conditions. Immediate action must be taken in the event of a fault
- All routine maintenance and lubrication must be carried out with the machine de-energized. Follow your companies lock out/tag out procedure

Warranty

The warranty (with the exception of parts subject to wear) is 12 months starting from the date of delivery (namely the date indicated on the machine delivery receipt).

The warranty covers replacement or repair of faulty parts (as recognized by ASG, Division of Jergens, Inc.) free of charge but does not cover installation charges. Packaging and transport costs are at the customer's expense.

IMPORTANT:
Any unauthorized modification or tampering of the machine and its safety systems relieves the manufacturer from any liability in terms of guarantee, warranty and safety. Any modification of the original equipment without a written authorization will void the warranty.

Section 2: General Features

Intended Use

- This machine is a pneumatically actuated device that feeds screws to facilitate automatic screw driving
- This machine is designed for use in standard industrial environments
- This machine should be run only by persons that have been trained to operate it safely. Trained personnel must be familiar with the contents of this manual

Auto Feed Models

See Figure 1

The Telescopic Device with 1 Sensor is used for working at different depths. It is fitted with a spring that pushes the end section forward. In normal position, the end section is in its forward stroke end position. By grasping the outer grip of the device, the operator exerts pressure on the piece. The screw retainer head makes the device retreat so that the screw can be tightened in place. The sensor (S1) detects the correct position of the device. During this stage, the bit leaves a free gap for passage and subsequent feeding of the screw. This prevents screws jamming during the feeding stage. This device accommodates push start tools.

The Telescopic Device with 2 Sensors is used when it is necessary to guarantee an established screw height. It operates in the same manner as the 1 sensor version but is fitted with another sensor (S2) that controls the outward movement of the bit. Unlike other devices, which interrupt tightening upon reaching the established torque setting, this device uses the sensor to interrupt tightening when a certain height has been reached.

The Forward Stroke Device is used for screw driving on flat surfaces or at a limited depth. The first (1) movement pushes the screw out, whereas the second (2) is the actual tightening stroke.

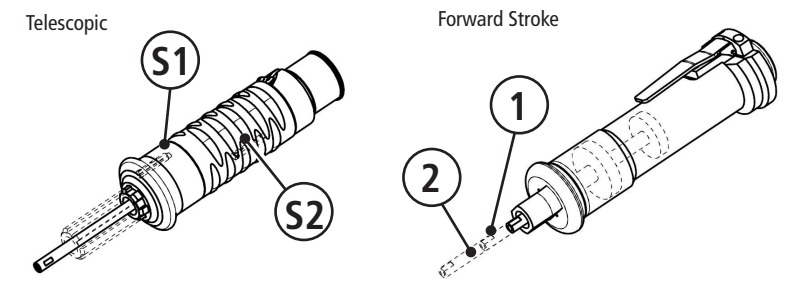

Figure 1

General Features

Prohibited Uses

It is prohibited to use the machine and devices:

- Without their guards and/or with their safety devices deactivated, out-of-order or missing
- When they are malfunctioning
- Improperly or by untrained personnel
- For uses not complying with intent of the tool
- In the event of supply defects
- If maintenance is not up to date
- Unless the appropriate personal protective equipment is worn
- After unauthorized modifications
- With material and/or tools differing from those indicated for normal machine operation
- At operating temperatures over 165°F (75°C)
- In corrosive environments
- Unless all instructions are observed

The machine cannot be used in any of the following conditions:

- In environments where the average temperature in a 24 hour period is over 140°F (40°C) or below 35°F (2°C)
- In environments where there is a risk of explosion or fires

IMPORTANT:
Any deviation from the above mentioned specifications require written authorization by the manufacturer.

Any modification that has not been authorized by the manufacturer will be made at the exclusive responsibility of the person/company making that modification.

General Features

Main Components

See Figure 2

Screw Feeding System:

- Vibrating Bowl **(V)**
- Tooled Bowl **(T)**: fastened with 3 screws to the vibrating base and fitted with 3 flow regulators
- Screw Overflow Sensor **(S)**

Function of the Flow Regulators:

1. Allows the screws to fall into the bowl if the overflow sensor detects the presence of a screw; the regulator stays active until the screw disengages the sensor
2. Allows screws that are misoriented to fall into the bowl
3. Pushes the screws forward to ensure the feeding unit is fed correctly

Screw Selector and Feeding Unit (P):

System that uses a carriage driven by a pneumatic cylinder to separate the screws and convey them individually inside a tube, in which a blast of compressed air provides the thrust required to send the screw into the tightening head.

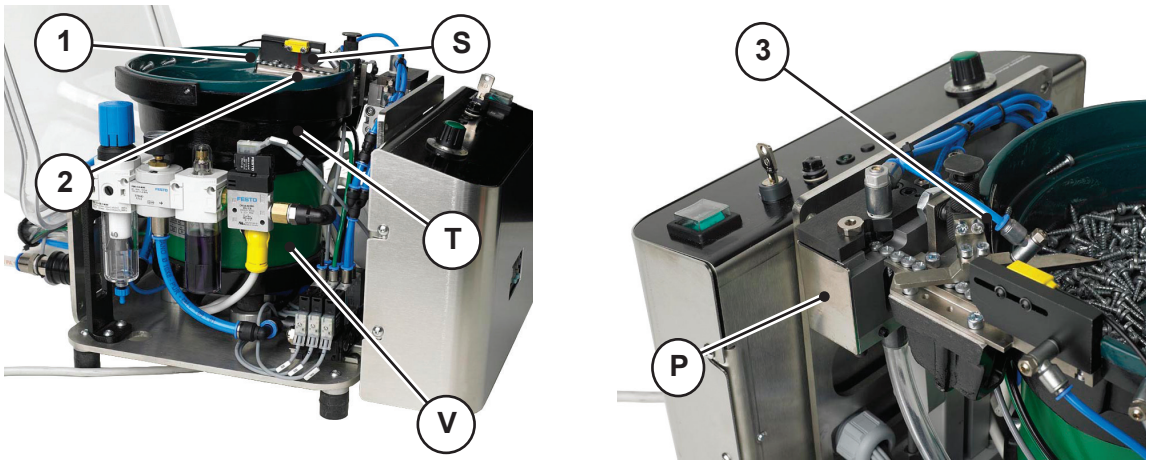

Figure 2

General Features

Main Components (Continued)

See Figure 3

Base and Enclosure:

Consisting of a metal base **(B)** fitted with feet for positioning on level surfaces, on which two right and left side slot-in enclosure panels **(C)** are fastened along with an opening top guard **(A)**.

Switchboard Cabinet (Q) and Controls:

1. Vibration control
2. 3 LED indicator lights that change color depending on the type of tool and device:
   - S1 = (green) main power ON
   - S2 = (green) sensor T1, telescopic version only
   - S3 = (green) sensor T2, telescopic version only
3. Key-operated selector for switching between tightening program 1 and 2 (optional in some cases)
4. I/O (ON/OFF) switch
5. 24V fuse
6. Control panel for setting certain parameters (i.e. timers, etc.)

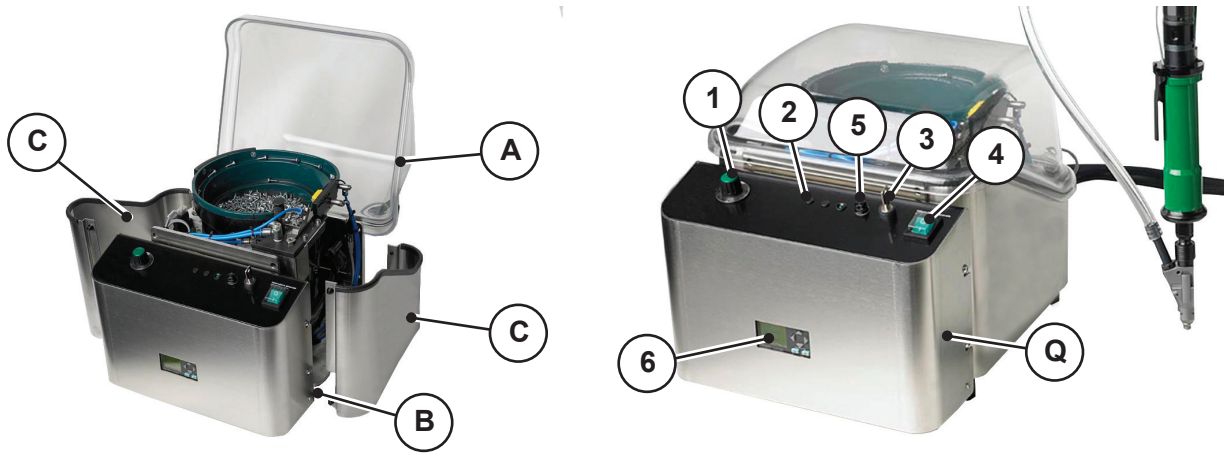

Figure 3

General Features

Main Components (Continued)

See Figure 4

Compressed Air (Air Treatment) Unit:

1. Regulator filter
2. Module for non-lubricated air delivery with pressure indicator
3. Oil feeder with lubricated air delivery valve (optional with Forward Stroke and Telescopic Version T2 only)
4. Set of solenoid valves:
   - 4a. Manages operation of selector and screw feeding
   - 4b. For auto feed management (optional with Forward Stroke only)
   - 4c. Regulates the flow regulator blast for anti-tipping systems (optional, fitted with anti-tipping systems to reduce air consumption)

Rear Interface:

1. Air inlet fitting, 3/8″ diameter, with manual slider valve
2. Air tool air supply fitting
3. 3 quick couplers for auto feed device
4. Screw feeding tube
5. Electrical connection (EC1, EC2 and EC3)

Tightening Systems:

1. Set of tubes for tool
2. Hook for balancer
3. Tool with quick release
4. Screw retainer head

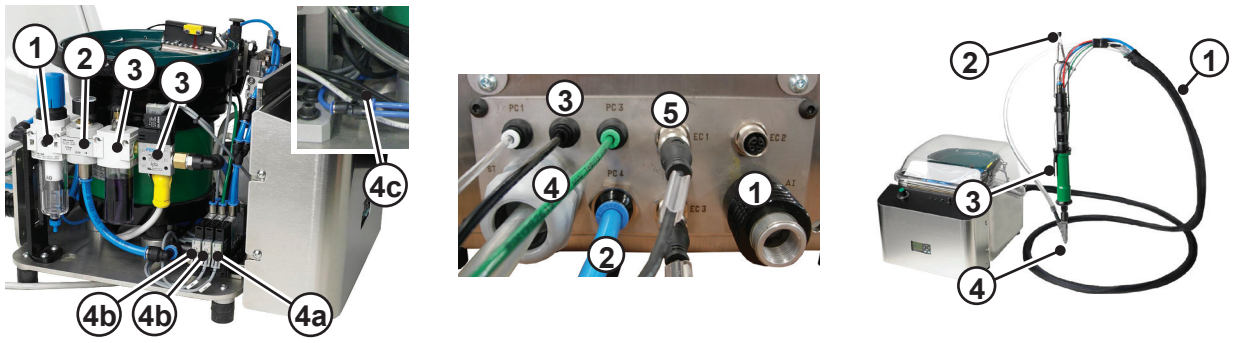

Figure 4

General Features

Main Components (Continued)

See Figure 5

The Telescopic Device with 1 Sensor is composed of:

- Fixed Section (Fi)
- Mobile Section (Fl)
- Stroke End Sensor with Bit (S1)

The Telescopic Device with 2 Sensors is composed of:

- Fixed Section (Fi)
- Mobile Section (Fl)
- Stroke End Sensor with Bit (S1)
- Sensor Regulating Movement of Bit (S2)

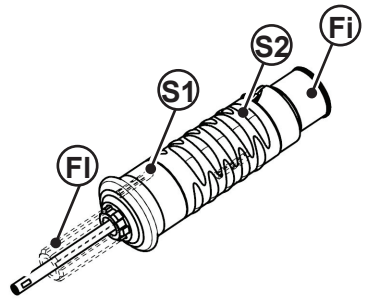

Figure 5

See Figure 6

The Forward Stroke Device is composed of:

- Body (C)
- First Piston (P1)
- Second Piston (P2)
- Mobile Bit (M)

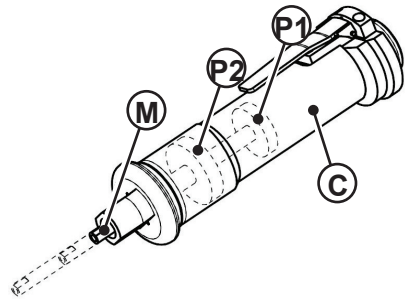

Figure 6

General Features

Nameplate

See Figure 7

The machine's identification data can be found on the plate fastened to the machine.

IMPORTANT:
For no reason may the information printed on the plate be altered.

NOTE:
Refer the serial number every time you contact the manufacturer for information or spare parts.

The identification plate includes the following information:

Code	XXXXXXXX
Serial Number	XXXXXXXX
Year of Manufacture	2010
Voltage	110/220 V
Frequency	50/60 Hz
Compressed Air Supply	0.6 MPa (6 bar)
Guaranteed Flow Rate	1000 Nl/min.
Weight	Machine body approx. 36kg Tool approx. 1.3 kg

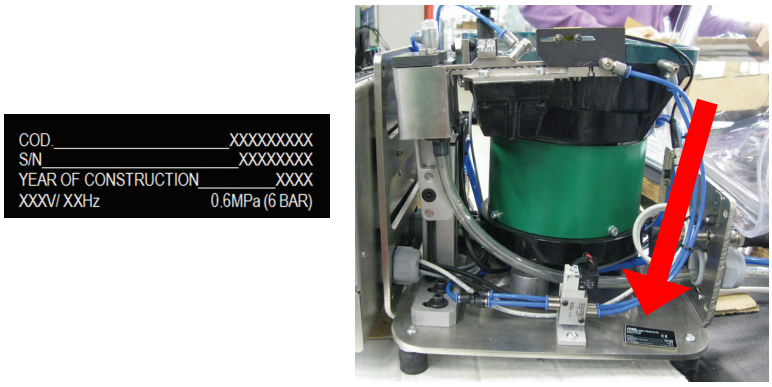

Figure 7

Technical Specifications

Machine Specifications: See nameplate

Specifications of Devices: Maximum inlet pressure to device is 90 PSIG

Airborne Noise: Sound pressure level is lower than 80 db(A) (with top guard closed)

General Features

Technical Specifications (Continued)

Electromagnetic Compatibility:

The provisions adopted to minimize disturbance to the equipment from other sources are described below:

- Ground (earth) connection of all metal parts
- Shielding of signal leads less than 30 volts

To guarantee correct operation of the above, the end user must provide a correct ground connection of the switchboard and correct shielding of all signal leads with a voltage lower than 30 V. All leads are insulated with fire-retardant material of type N03V-K with a level of insulation not lower than 300 Volts.

Cable trays are also made of insulating and fire-retardant material.

Products Handled:

Screw Specifications:

- Head Diameter from 0.177in. to 0.531in. (4.5mm -13.5mm)
- Shank Diameter: from 0.078in. to 0.236in. (2mm - 6mm)
- Total Length: from 0.315in. to 1.378in. (8mm - 35mm)

NOTE:
Make sure that the total length of the screws is at least 1.5 times the maximum diameter of the head or, if they do not fall within the ranges given, that they have at least been approved by ASG for the machine to which this manual refers.

See Figure 8

For devices: Use only ASG approved heads and bits

General Layout:

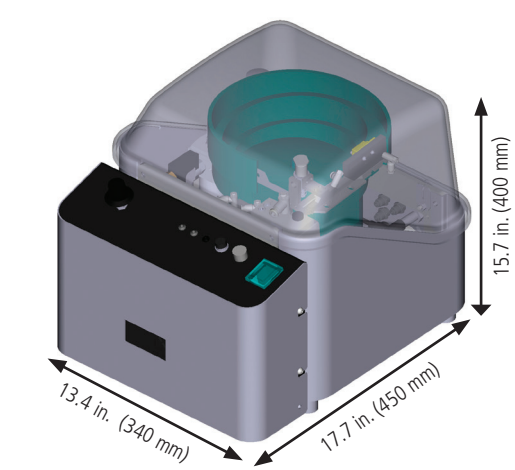

Figure 8

Typical Application:
Length of Tool: approx. 20 in. (500mm)
Length of Hose Bundle: approx. 16.4 ft. (5000mm)

Section 3: Safety Requirements

IMPORTANT:
It is strictly prohibited to start or use the machine without its guards and safety devices in place.

Guards

See Figure 9

Fixed Guards (A1-A3):
Fixed panels covering the machine zones that must not be accessed during operation.

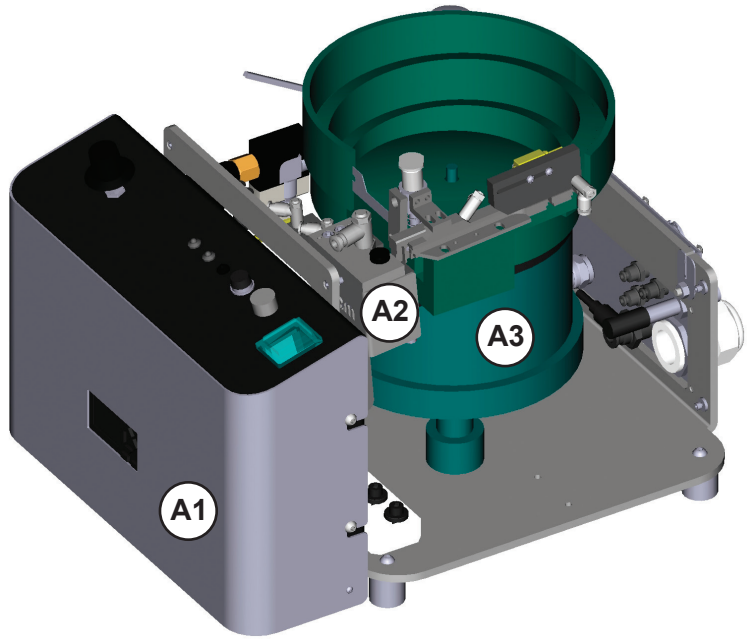

Figure 9

Safety Requirements

Residual Risks

Personal Protective Equipment (PPE): Should it be necessary for operational or servicing reasons to work on the system manually, operators should wear the necessary Personal Protective Equipment below.

- Overalls
- Ear Protection
- Heat Resistant Gloves
- Hard Hat
- Non-slip Footwear
- Protective Eye Wear

Unexpected/Accidental Machine Starting: De-energize the equipment and follow your company's lock out/tag out procedures

Tightening Head: During the tightening stage, the bit comes out of the head and creates a hazard due to its high-speed spinning. Never touch it and never wear garments or use objects that may become entangled in the moving part.

Sudden Start of Tightening Cycle:

- Never leave the tool unattended with the switch ON
- Keep at a safe distance from the tool
- Make sure that there is nobody in the work area when using the tool

Breakage of Feeding Tube: Should the feeding tube accidentally break during screw feeding, there is a residual risk due to the speed at which the screw is shot out. To avoid this hazard, check the tube for wear regularly. At the same time, check that it is firmly fastened to the head, screw selector and feeding unit. If you notice even minor tears, inform authorized personnel that it needs to be replaced immediately. In this event, DO NOT use the machine.

Pinching Hazard: If the top shield is left open while the machine is operating, there is a risk of pinching; to avoid this hazard, simply switch off the machine whenever the top shield has to be opened to remove jammed screws.

Rotation: The air inlet slider valve can be used to exhaust air from the compressed air circuit. Nonetheless, there may still be pressure in the tool supply hose (where applicable). Therefore, the motor should be allowed to keep running until it stops on its own.

Devices: The use of the device is permitted only with components supplied by ASG.

Safety Requirements

Workstation

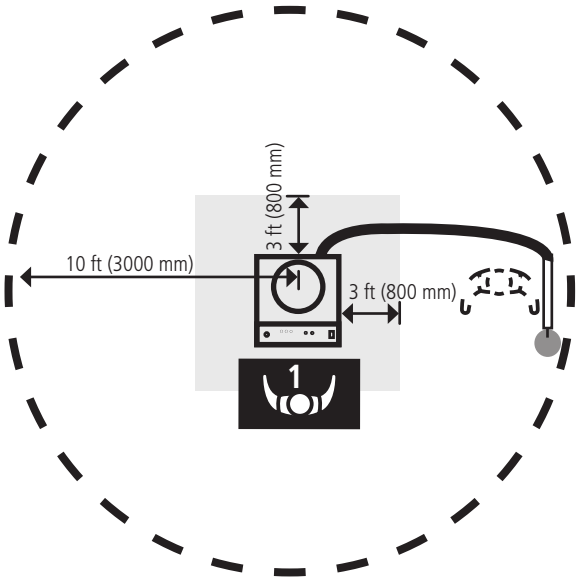

Figure 10

Legend			
Machine Operating Area	Machine Maintenance Area	Danger Zone	Work Area
1			

See Figure 10

Machine Operating Area: Area for the machine operator. During operation, the operator must be standing such that (s)he has good visibility over the machine production cycle. The operator must be positioned such that (s)he may start/stop the machine quickly. This area is in front of the control panel.

Work Area: Area in which operators perform routine manual operations for normal operation of the machine. This area must not feature any risks either permanent or temporary that may put the operator's safety at risk (tripping, collision, slipping, etc.).

Machine Maintenance Area: Work area in which the operator performs manual operations for maintenance and/or adjustments. It is prohibited to gain access to this area during maintenance (MOVING PARTS). Access is permitted only to qualified personnel and in any case when the machine is disconnected from all energy supplies. Block off this area during these operations.

Danger Zone: In this area, the machine performs its work cycle. It is strictly prohibited to gain access to this area when the machine is running and/or on (MOVING PARTS). In this area, there is a risk of crushing or entrapment. Only authorized personnel can gain access to the machine and only when the machine is off.

IMPORTANT:
For safety purposes, prevent access or passage of persons in the areas indicated.

Section 4: Start Up

General Warnings

IMPORTANT:
Before starting up the machine, read this manual with care and make sure to have understood its contents.

IMPORTANT:
Do not direct the feeding tube towards yourselves or others as there is a chance a screw might shoot out accidentally hence creating a very high risk of personal injury.

NOTE:
The machine has been designed for use by one operator only.

- For more information or explanations, contact ASG
- Persons in charge of running and servicing the machine must possess the specific competencies described in this manual as well as the psychological and physical abilities needed to use the machine
- The following paragraphs provide instructions for operating the machine

Start Up

Operation

See Figure 11

1. After lifting the cover, the operator fills the bowl with screws manually
2. Check that the tool is fitted with the right bit
3. Press the I/O button so that it is ON
4. Adjust vibratory bowl feeder intensity where necessary (default setting"5")
5. The machine is now ready to work; quickly pumping the tightening cycle start lever twice or simulating tightening against a surface draws in the screw
6. Keep the lever pressed or push the tool to perform tightening

During operation of the machine, the operator must keep the vibrating bowl unit filled with screws of a suitable type. To fill the bowl, open the top plexiglass guard and fill the bowl with screws.

NOTE:
Use only screws of the type handled. See specifications on page 14.

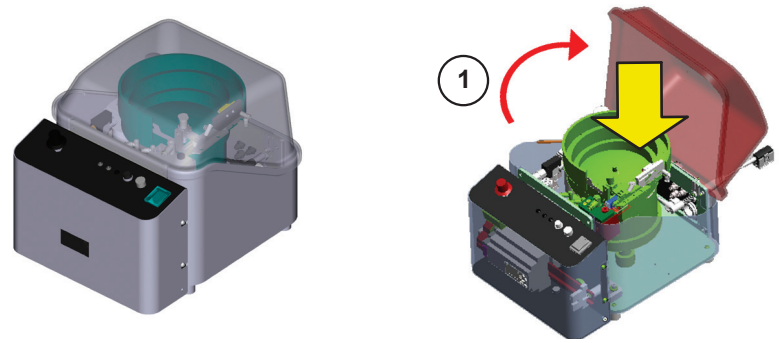

Figure 11

IMPORTANT:
During the filling operations, avoid any contact with the vibrating bowl.

Start Up

Size Changeover

When changing to a different size, you will need to remove all screws from the vibrating bowl and fill it with the new ones. If necessary, replace the bit.

Control Panels

See Figure 12

Control Panel:
Under normal operating conditions, the panel will appear as illustrated in Figure 12.
1000: the number of tightening cycles performed, in thousands
CICL: the number of tightening cycles performed; as soon as it reaches one thousand, the above value is increased and this value is reset to zero

From this screen, press the down cursor to display the clock. Press ESC to call up a menu with 4 items. Select "Set Param.." press OK. Scroll up and down to find the following items.

Figure 12

Parameters:

VAR.	Min/Max Seconds	Description
T_VIB	08:00 / 60:00	Duration of Vibration
T_MIN_AV	00:20 / 05:00	Min. Time Needed to Acknowledge that Tightening is OK and Draw in the Next Screw
R_SELEZ	00:00 / 01:00	Time Running Between End of Tightening Cycle and Next Feeding Cycle
T_SELEZ	00:50 / 05:00	Activation Time of the Screw Selection and Feeding Valve
FTP_ON	00:20 / 05:00	When Screws Engage the Photocell for a Time Exceeding this Setting, an Ejection Blast is Activated
FTP_OFF	00:20 / 05:00	When Screws Do Not Engage the Photocell for a Time Exceeding this Setting, the Ejection Blast is Deactivated
T_MOT_L	00:00 / 01:00	ONLY FOR TELESCOPIC VERSION When working at a certain depth, this establishes the reading time of the sensor. Once the setting has been reached, the motor's valve is deactivated.
T_IMBOCC	00:00 / 02:00	Rotation of Bit after Arrival of a Screw
R_ROTAZ	00:00 / 01:00	Delay for Motor to Start Running

Control Panels (Continued)

Adjusting Operating Parameters:
To change a setting, select the parameter and press OK. Then use the up/down arrow keys to modify the setting. Use the right/left arrow keys to select the unit to modify.

NOTE:
The system is delivered factory set for optimum use with the screws previously supplied to ASG by the customer for the system's production.

IMPORTANT:
If inappropriate changes are made to the time settings, this may result in jamming or malfunctioning. ASG declines all responsibility for any consequences as a result of inappropriate changes.

Description of Starting and Stopping Modes

Normal Starting

- Put the ON/OFF switch in I (ON) position
- Start the air supply by means of the manual slider valve

Normal Stop

- Put the ON/OFF switch in 0 (OFF) position
- Shut off the air supply by means of the manual slider valve

Section 6: Installation

IMPORTANT:
Installation must be performed by qualified technicians; and in compliance with the safety and accident-prevention rules in force.

Ambient Conditions for Use

The machine has been designed for use in industrial environments, in non-explosive atmospheres, with temperature and humidity levels within the thresholds mentioned below:

- Temperature: min 35°F (2°C), max 104°F (40°C)
- Humidity: min 10%, max. 80%

Also make sure that your working environment fulfills the following requirements:

- Lighting: The place where the machine is installed must feature sufficient lighting either natural and/or artificial, and comply with the standards in force in the relevant country
- Location: The unit must be placed on a work bench with sufficient load capacity and adjustable feet so that the resulting workstation allows the operator to work safely, in a comfortable position, and have full control of the unit
- Power Sources: Power sources (electricity, compressed air...) must be direct and easy to access

End User Responsibility

The user must provide the following:

- Installation areas must comply with local health and safety standards
- An electricity supply line complying with local code having jurisdiction
- Earth ground connection
- A circuit breaker to protect against short-circuits, residual current and leakage between the unit's main power supply line
- A work bench on which the unit will be placed and anchoring of the unit

Installation

Positioning

1. Position the unit so as to provide the user with easy access to the control panel and to screws loading access.

IMPORTANT:
Make sure that the operator's work zone is safe and free of obstacles or other hazards likely to cause accidents.

IMPORTANT:
After positioning the machines, make sure that there are no crushed cables and/or hoses.

2. To keep the machine stable, you will need to choose a support that is strong enough to withstand the weight of the machine and to dissipate any residual vibrations.
3. After locating the machine, level it by means of its adjustable feet.

IMPORTANT:
The manufacturer is released from any responsibility for damage to property or injuries caused by the modification, tampering or elimination of guards and/or safety devices originally fitted to the machine.

Installation

Connections

Electrical Connections:

IMPORTANT:
All electrical connections must be made by qualified and explicitly authorized personnel in accordance with the jurisdiction having authority.

- Make sure the power supply lines are properly sized for the power ratings (voltage and frequency) of the machine. Power requirements are indicated on the machine and on the wiring diagram
- The ON/OFF switch must be OFF

See Figure 13

- Plug the power cable into the power outlet. Make sure there are no objects or foreign items in the machine's operating area. You can now turn on the machine by putting the ON/OFF switch in the ON position. The light on the ON/OFF switch will illuminate to indicate that the machine is powered

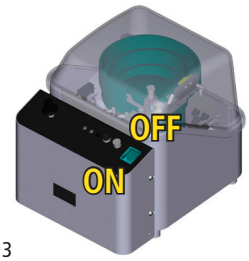

Figure 13

Pneumatic Connections:

IMPORTANT:
Connect the compressed air supply with the machine unplugged and with the facility's air supply circuit shut off.

Using appropriate hosing, connect the compressed air supply to the filter-regulator unit's inlet by attaching a supply hose with an inside diameter of 12mm to the fitting and use a hose clamp to secure it. Pressure must range from 85 to 100 PSIG (6-7 bar).

See Figure 14

Pressure must from 85 to 100 PSIG (6 to 7 bar). Open the supply system valve, once you have checked that the manual slider valve **(V)** is closed (pulled in the opposite direction to the unit's housing); open the manual slider valve by pulling it towards the unit's housing and check the pointer on the pressure gauge **(M)** to ensure that there is air in the machine, set pressure to 85 PSIG (6 bar) by adjusting the air filter regulator **(R)**.

Installation

Connections (Continued)

Pneumatic Connections (Continued):

IMPORTANT:
The compressed air supply line must be fitted with a filter and a shut-off valve in order to turn the machine off in the event that maintenance is necessary. If the machine is not in a safe condition, shut off air and power.

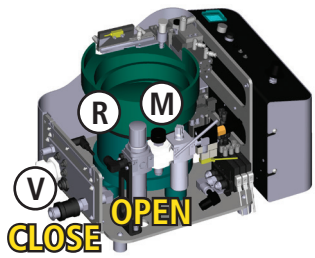

Figure 14

Connecting the Devices:

See Figure 15

The device is connected to the machine by a set of tubes (also called 'bundle'). The tubes contain all compressed air and electric supply parts; the electric supply part is connected by means of connectors with screws; the compressed air part features quick couplers.

In the Forward Stroke Device, tubes have different colors. They are also cut to an established length to make it easier to recognize them and provide the correct connections. Pay attention to correct connection of the tubes.

- Electrical Connection: Telescopic Device with 1 Sensor, Telescopic Device with 2 Sensors, and Forward Stroke Device
- Compressed Air Connection: Forward Stroke Device

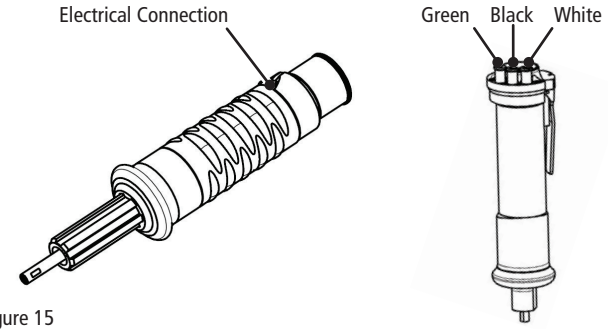

Figure 15

Section 6: Adjustments and Initial Set-Up

IMPORTANT:
Maintenance of the machine must be carried out in compliance with the safety rules in force. Isolate the machine from the power supply (unplugged) and compressed air supply lines (manual slide valve closed). Press the tightening cycle start lever to use up all air still inside the tool.

Adjusting Intensity of Vibration:

See Figure 16

Use the potentiometer to adjust intensity of vibration. Adjust the intensity until the screws move up in an orderly manner (and not too fast).

Figure 16

Adjustments and Initial Set-Up

See Figure 17

Setting the Photocell Along Sidewall Slot:

To set the photocell (A) along the sidewall slot, proceed as follows:

- Loosen the two screws (B) so that the photocell can slide along the slot
- Fill the queuing channel so that just one screw (C) is outside the rotating top shield
- Center the photocell's beam so that it hits the middle of the last screw (C)
- Make sure the LED on the sensor comes on and stays steadily lit
- If the operation is successful, tighten the screws (B)

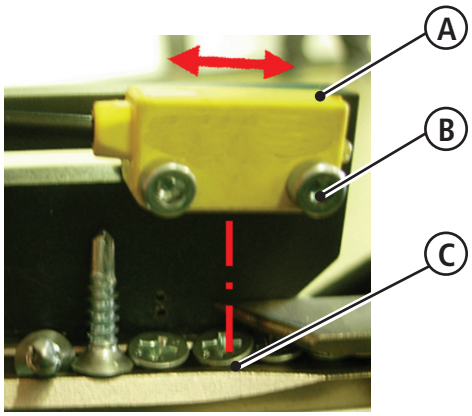

Figure 17

See Figure 18

Adjusting the Screw Blast (optional):

The default factory setting leaves the flow regulator fully closed. If screws appear as illustrated (A), i.e. not hanging by their heads, adjust the blast by proceeding as follows:

- Using a flat-bit screwdriver, turn the blast regulator screw (B) counter-clockwise slowly
- When the screws (in an incorrect position) are removed from the track, the screw blast is set correctly

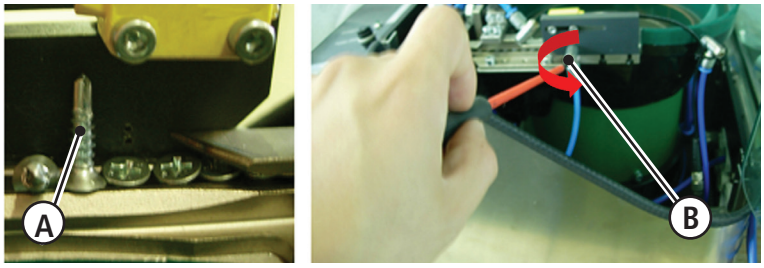

Figure 18

Adjustments and Initial Set-Up

See Figure 19

Setting Screw Selection and Feeding Flow Speed:

The speed at which the cylinder is opened and closed can be adjusted using the adjuster screws illustrated below.

- With the aid of a 3mm Ø flat-bit screwdriver, turning the regulator **(A)** clockwise slows down the speed at which screws are discharged into the tube. Turning the regulator **(B)** clockwise slows down movement towards the center (screw loading)
- To increase speed, turn the regulators counter-clockwise
- To adjust feeding flow speed **(C)** the PLC must be adjusted. Mechanical speed adjustment is inversely proportional to the time setting of the PLC. In other words, reduce time to obtain a higher speed and increase to reduce speed

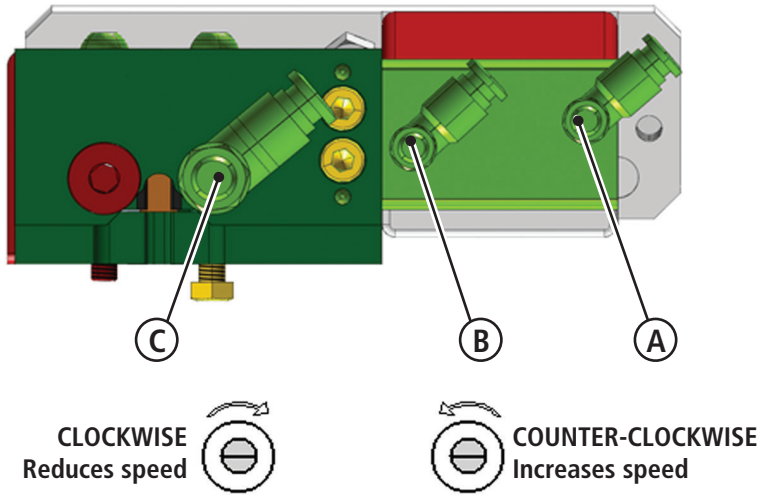

Figure 19

Adjustments and Initial Set-Up

Adjusting Position of Head:

IMPORTANT:
Perform this operation with the machine disconnected from the electricity and compressed air supply lines (manual slider valve closed).

See Figure 20

The position of the head can be adjusted as follows:

1. Grip the head with your hand. Keeping the grooved nut between your thumb and index finger, pull it so that it moves by about 1/8" (3 mm).
2. Turn the head until it reaches the desired position (in 120° increments). Make sure the head is secured in place by checking if the ring nut has snapped into place. The head must not turn.

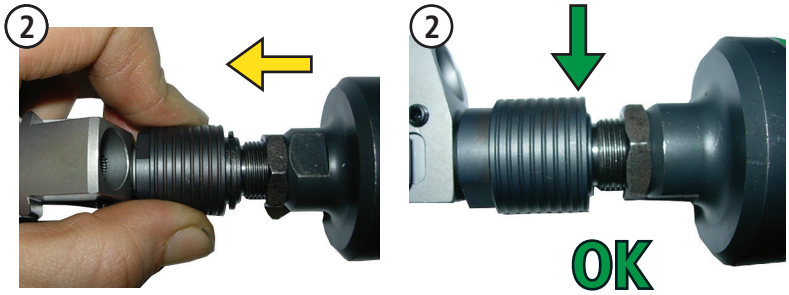

Figure 20

Adjusting Speed of Bit Outward Movement (Forward Stroke Device Only):

See Figure 21

By tightening the regulator (R), on the black tube, you can reduce the speed of the bit's outward movement. Loosen the regulator to increase speed.

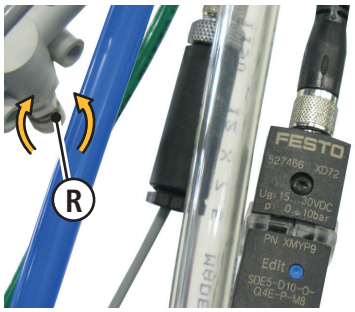

Figure 21

Adjustments and Initial Set-Up

See Figure 22

Aligning Bowl and Selector:

- Loosen the self-locking nut (A) with the included socket wrench
- Turn the bowl (B) and align the tracks (C) at the entrance of the selector
- Insert the aligning block (D), that you will find in the kit supplied, and tighten the screws (E) with a socket wrench
- Remove the aligning block (D)
- Loosen the wing nut (F) securing the shield in place
- Align the shield (G) and tighten the wing nut (F)

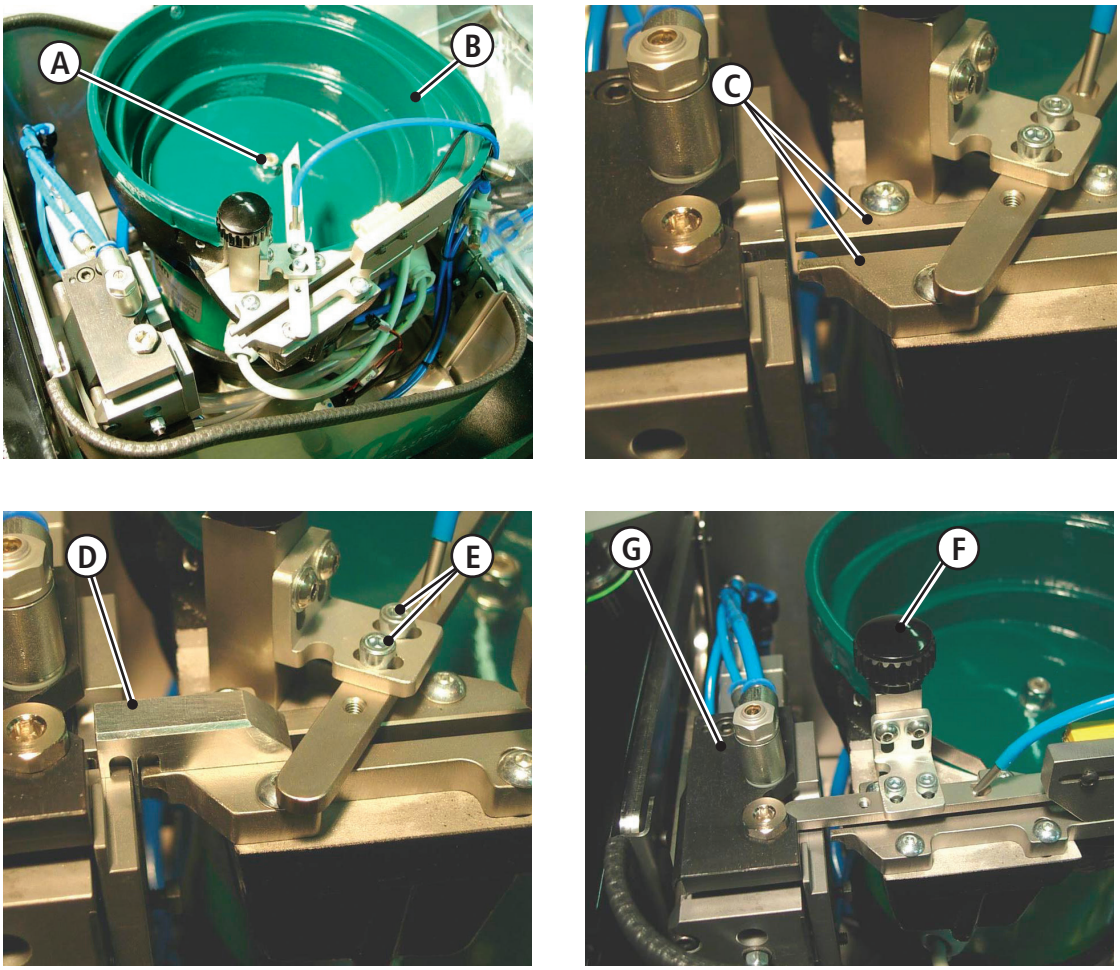

Figure 22

Adjustments and Initial Set-Up

See Figure 23

Depth Sensor Adjustment (Telescopic Device with 2 Sensors Only):

- Turn off the air supply but do not turn off the switchboard
- Remove the head by acting on the quick coupler
- Remove the bell-shaped cover
- Remove the rubber handgrip
- Locate a finished/tightened screw
- Retract the tightening head towards the hand grip and, while the bit is visible, fit it into the slot of the previously tightened screw
- While holding the tool against the screw, move the head slowly down towards the supporting surface (to make sure that head moves down to the end of its stroke, act on both jaws to keep them open)
- Make sure that the tool is aligned with the screw
- Using the allen wrench supplied, loosen the fixing dowel of sensor S2 and move the sensor in the direction opposite to the head
- Move the head slowly down along the slot until the LED on the sensor comes on then tighten the dowel
- The first calibration session is complete. Perform a few trial tightening cycles and if necessary make fine adjustments on the sensor by loosening or tightening the head on the device
- When you are satisfied with the results, refit the rubber hand grip and bell-shaped cover before using the tool again

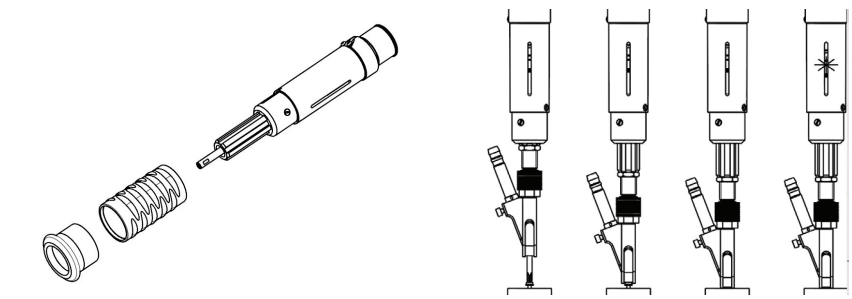

Figure 23

Section 7: Maintenance

IMPORTANT:
Maintenance of the machine must be carried out in compliance with the safety rules in force.

All maintenance must be made with the machine isolated from the power supply (unplugged) and compressed air supply lines (manual slide valve closed).

Press the tightening cycle start lever to use up all air still inside the tool.

1. Maintenance of the machine must be carried out by qualified and explicitly authorized personnel only.
2. Before carrying out repairs or any other work on the machine, always warn the other operators involved of your intentions.
3. To prevent accidental activation of the machine during replacement, cleaning, maintenance and repairing:
   - Follow your company's standard lockout/tagout procedures
   - Unplug the machine
   - Close the manual slider valve to cut off the compressed air supply, close the air filter and make sure the pressure gauge indicates that there is no pressure
   - Press the tightening cycle start lever to use up all air still inside the tool
4. Never wear rings, wrist-watches, jewelry, loose-fitting or hanging clothing such as ties, torn garments, scarves, unbuttoned jackets or unzipped overalls, that could get caught up in moving parts
5. Never perform maintenance in wet/damp environments. The area where the maintenance operations are executed must always be kept clean and dry.
6. Never carry out any of the following operations on the frame: drilling, cutting, etc. These could damage electrical cables and weaken the structure.
7. During the execution of arc welding, isolate the metal parts of the machine involved, as the earth connection contact of the welding machine could damage the electrical equipment.
8. The machine must only be used for its designed purpose. For other uses, contact ASG.
   - Do not wash with water or in any case direct blasts of water towards the machine
   - Do not tamper with the safety devices
9. Use only original spare parts provided by ASG.
10. Keep a written record on a daily or weekly basis concerning recordings (pressure, temperature, power draw, etc.) and any faults, maintenance, or replacement parts information you may consider useful. Performing periodic maintenance will ensure that your machine is in working order.
11. Apart from periodic maintenance on the various components of the machine, it is recommended to keep the machine and surrounding area clean and tidy.

Maintenance

IMPORTANT:
Before starting the machine, make sure that:
Any guards removed during maintenance operations have been correctly fitted and are in working order.

All spare parts are correctly assembled and secured in place.

All foreign objects (cloths, tools, etc.) have been removed from the machine.

IMPORTANT:
Do not work on the machine with tools, cleaning equipment, etc. when it is running.

Never reach into the holes and slots with hands when the machine is running (danger of crushing).

Scheduled Maintenance

Operation	Frequency
Check safety devices	120 hours
Clean the machine	120 hours
Lubricate moving parts	600 hours
Check pneumatic components for wear	600 hours
Drain condensate from air treatment unit	600 hours
Drain oil from unit	600 hours
Top off oil in oiler (for pneumatic tools only)	600 hours
Overhaul motor	Every 1000 hours
Check and tighten nuts and bolts as necessary	Every 1000 hours

Maintenance

Cleaning

IMPORTANT:
Maintenance of the machine must be carried out in compliance with the safety rules in force.

All maintenance must be made with the machine isolated from the power supply (unplugged) and compressed air supply lines (manual slide valve closed).

Press the tightening cycle start lever to use up all air still inside the tool.

It is always recommended to keep the machine clean so as to avoid early wear and damage to mobile parts or components.

- With a soft-bristle brush and a clean cloth, remove dust from every surface
- To clean the machine, use water and, if necessary, non-toxic, commercial solvents. NEVER use petrol or flammable solvents to clean the machine
- Use an industrial-grade vacuum cleaner to effectively clean the less accessible areas. Clean and dry with a soft and dry cloth
- Dust transparent surfaces with a blast of compressed air
- Clean components with a soft cloth, dipped in water and a mild soap, or spray them with anti-static products that facilitate dust removal. Dry with care

Cleaning at the End of Production

Apart from normal cleaning, perform the following operations:

- Remove any dust and production debris (fragments of metal, etc.) from all uncovered parts and internal compartments of the machine.

Cleaning the Screw Sorting Unit Bowl

At the end of a work shift, clean the bowl to remove any residue using a cloth and alcohol.

Lubrication

IMPORTANT:
Maintenance of the machine must be carried out in compliance with the safety rules in force.

All maintenance must be made with the machine isolated from the power supply (unplugged) and compressed air supply lines (manual slide valve closed).

Press the tightening cycle start lever to use up all air still inside the tool.

The machine is fitted with an automatic lubrication system.

Lubrication (Continued)

The most important properties of oil to use for lubricating gears are:

- Stability to oxidizing
- Resistance of oil coat to pressure
- Wear-proof and rust-proof properties

Properties of grease are:

- Optimal adhesion
- Resistance to separation
- Water resistant

Taking into account the above important requirements, use brands that have suitable characteristics.

NOTE:
Lubricate the machine only when it is isolated from the electricity and compressed air supply lines.

Lubrication Points

The greasing points on the machine are:

- Screw dispenser of the vibrating bowl unit

IMPORTANT:
All lubrication operations must be performed with the machine disconnected from all energy supplies.

It is recommended to grease the guides of the sorting shuttle with graphite grease:

See Figure 24

- Grease the outer sides of the guides **(E)**
- Grease the inner areas of the guides after moving the shuttle **(I)**

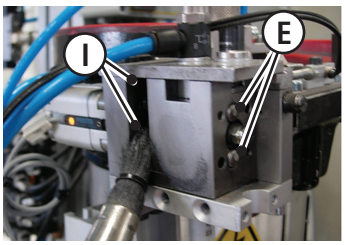

Figure 24

Maintenance

Pneumatic Devices

Maintenance of pneumatic devices must be performed after disconnecting the machine from all energy supplies (electricity, compressed air). Pneumatic circuits must be in "no pressure" condition in order to avoid any danger.

After maintenance:

- Make sure all screws are firmly tightened
- Make sure that all sheaths and cable ducts are closed and sealed
- Make sure that any guards that have been removed are secured in place.

Condensate Drainage (See Figure 25)

- Press key (T) under the filter to drain any oil from the circuit

Filling Oil in the Oiling Cup (See Figure 25)

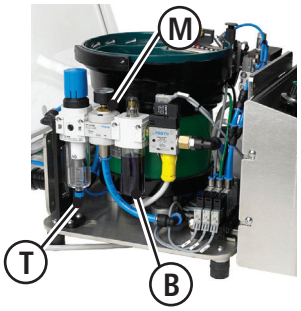

Figure 25

IMPORTANT:
Perform this operation with the manual slider valve closed (pull towards the opposite side of the machine body) and tighten the regulator on the filter: you can check that this condition has been met by making sure that the reading on the pressure gauge (M) is "0". Press the tightening cycle start lever to use up all air still inside the tool.

To Fill Oil in Oil Cup:

- Unscrew and remove the cup (B)
- Fill cup 3/4 full with appropriate pneumatic oil
- Refit the cup
- Open up the air circuit

Routine Maintenance

IMPORTANT:
Maintenance of the machine must be carried out in compliance with the safety rules in force.

All maintenance must be made with the machine and isolated from the electricity and compressed air supplies.

By opening the shield, there is a risk of pinching if the machine is running.

Maintenance

Routine Maintenance (Continued)

Removing Jammed Screws from the Vibrating Bowl

See Figure 26

When screws jam in the vibrating bowl, proceed as follows:

- Unscrew the knob (M) to turn the top shield (T) and remove the screw that caused the jamming (this is usually a screw with macroscopic defects (e.g. pan head amongst countersunk heads, machining burrs, or less visible defects, such as size outside tolerance)

Proceed as follows only in the event this fails to solve the problem:

- Loosen the two screws of the fixed plate (V) and lift it
- Remove the jammed screw
- Resume operations

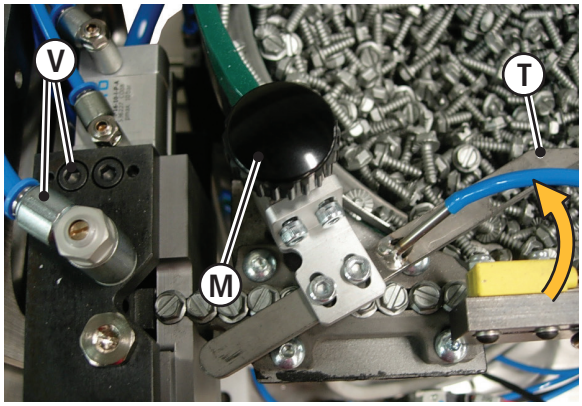

Figure 26

Replacing Fuses (24V)

See Figure 27

- Unscrew the cap (C)
- Remove the damaged fuse and replace it with the new 24V fuse
- Screw the cap back on

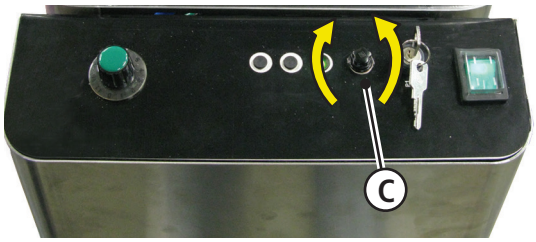

Figure 27

Maintenance

Routine Maintenance (Continued)

Removing Jammed Screws from the Tightening Head

IMPORTANT:
Maintenance of the machine must be carried out in compliance with the safety rules in force.

All maintenance must be made with the machine isolated from the power supply (unplugged) and compressed air supply lines (manual slide valve closed).

Press the tightening cycle start lever to use up all air still inside the tool.

See Figure 28

When screws jam in the head, proceed as follows:

- Release the quick coupler by pulling the grooved ring nut (D) down
- Remove the head (T)
- Perform the operations in reverse order to resume working conditions
- Make sure the head is secured in place by checking if the ring nut has snapped into place. The head must not turn

If necessary:

- Loosen the dowel with the hexagonal socket (G)
- Remove the bushing (B)

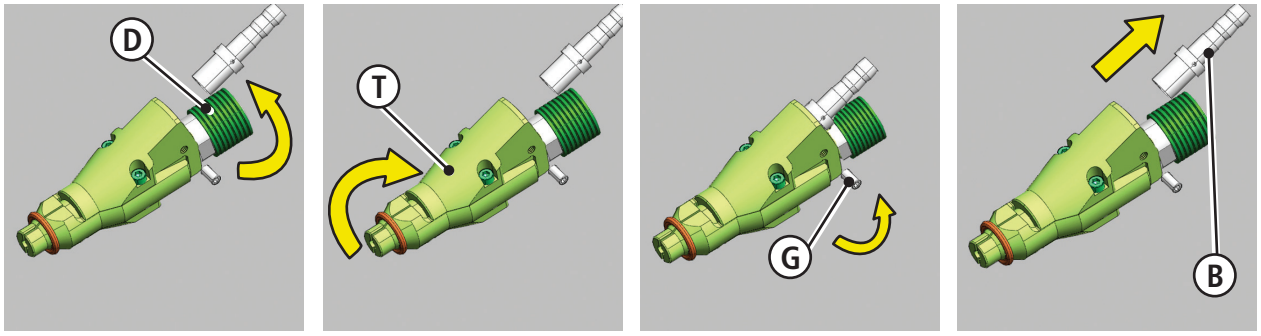

Figure 28

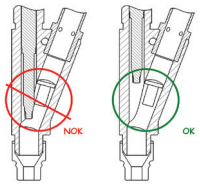

Figure 29

NOTE:
If the head screws are removed, make sure that the screw channel is not occupied by the insert as shown in Figure 29. If this happens, clear the screw and retract the insert

Maintenance

Routine Maintenance (Continued)

Replacing the Bit of the Tool's Accessory

IMPORTANT:
Maintenance of the machine must be carried out in compliance with the safety rules in force.

All maintenance must be made with the machine isolated from the power supply (unplugged) and compressed air supply lines (manual slide valve closed).

Press the tightening cycle start lever to use up all air still inside the tool.

NOTE:
After maintenance, tools must be tested to make sure that they work correctly. The list of spare parts must be handled by competent and expert staff members.

Use spare parts provided by ASG.

See Figure 30

If you need to replace the bit (I), proceed as follows:

- Loosen the dowel with the hexagonal socket
- Remove the bushing
- Release the quick coupler by pulling the grooved ring nut down
- Remove the head
- Unscrew and remove the bit (I) and replace it with a new one
- Perform the operations in reverse order to resume working conditions

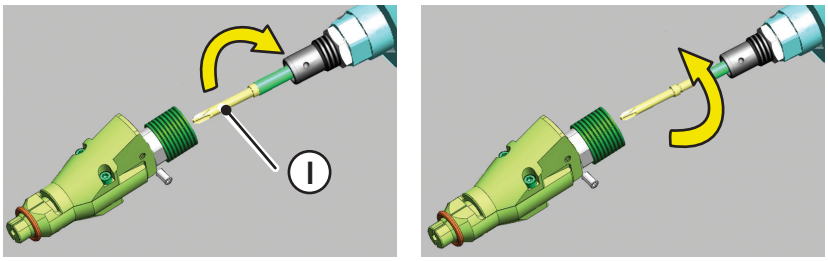

Figure 30

Routine Maintenance (Continued)

Replacing the Bushing

IMPORTANT:
Maintenance of the machine must be carried out in compliance with the safety rules in force.

All maintenance must be made with the machine isolated from the power supply (unplugged) and compressed air supply lines (manual slide valve closed).

Press the tightening cycle start lever to use up all air still inside the tool.

NOTE:
Use spare parts provided by ASG.

Should it be necessary to remove the bushing, proceed as follows:

- Loosen the dowel with the hexagonal socket
- Remove the bushing and replace it
- Perform the operations in reverse order to resume working conditions

Replacing the Complete Tightening Head Assembly

IMPORTANT:
Maintenance of the machine must be carried out in compliance with the safety rules in force.

All maintenance must be made with the machine isolated from the power supply (unplugged) and compressed air supply lines (manual slide valve closed).

Press the tightening cycle start lever to use up all air still inside the tool.

NOTE:
Use spare parts provided by ASG.

To replace the tightening head, if this becomes necessary, proceed as follows:

- Loosen the dowel with the hexagonal socket
- Remove the bushing
- Release the quick coupler by pulling the grooved ring nut down
- Unscrew the head and replace it with a new one
- Perform the operations in reverse order to resume working conditions

Routine Maintenance (Continued)

Replacing the Jaws of the Tightening Head

IMPORTANT:
Maintenance of the machine must be carried out in compliance with the safety rules in force.

All maintenance must be made with the machine isolated from the power supply (unplugged) and compressed air supply lines (manual slide valve closed).

Press the tightening cycle start lever to use up all air still inside the tool.

NOTE:
Use spare parts provided by ASG.

See Figure 31

If you need to replace the jaws or jaw springs, proceed as follows:

- Remove the two jaw fixing screws **(V)**
- Remove the stop ring **(A)** (if this is fitted)
- Remove the jaws **(P)** and keep the springs **(M)**
  - **Note:** Replace jaw springs at this point if they are worn. Fit new jaws
- Perform the operations in reverse order to resume working conditions
- Head body **(H)**, see page 42 for more information

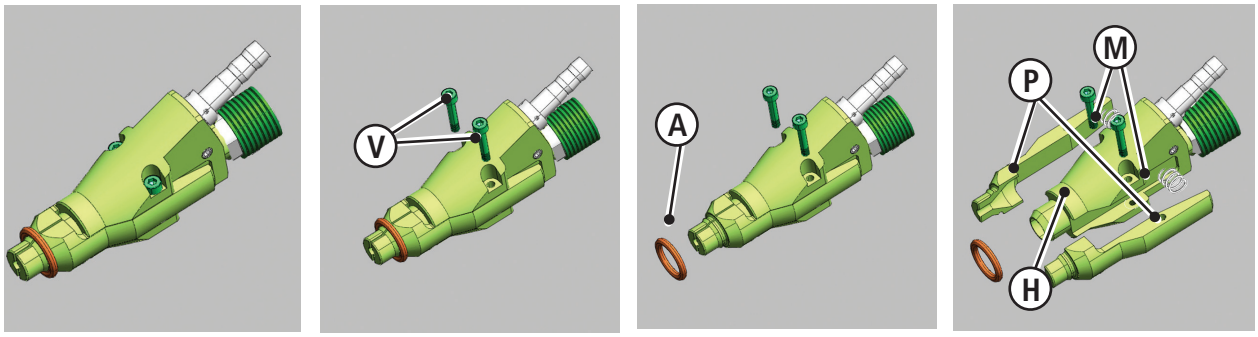

Figure 31

Routine Maintenance (Continued)

Replacing the Head Body:

IMPORTANT:
Maintenance of the machine must be carried out in compliance with the safety rules in force.

All maintenance must be made with the machine isolated from the power supply (unplugged) and compressed air supply lines (manual slide valve closed).

Press the tightening cycle start lever to use up all air still inside the tool.

NOTE:
Use only spare parts supplied by ASG

If you need to replace the head body plate, proceed as follows:

- Follow the procedure in Figure 28 (pg 38) to remove the head
- Follow the procedure in Figure 31 (pg 41) to disassemble the head

Replace the Head Body (H):

- Before refitting, check the surfaces on which the quick coupler will rest to make sure they are clean
- Grip the head and keep the ring nut pulled. Fit the head into the special bushing
- Once the head stops on the bushing, let go of the ring nut and let the head turn to allow the balls to fit into the seats on the bushing
- Make sure the head is fitted in place by making sure that the ring nut is in its seat, as shown in Figure 32. Attempt to remove the head to make sure that it does not accidentally come loose

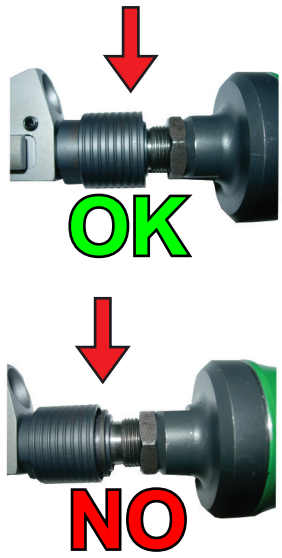

Figure 32

IMPORTANT:
Every time the head is removed and refitted, you must perform the following checks:

- Check that the head is fitted in place
- Make sure that the screw feeding bushing and feeding tube are firmly fixed
- Check the screw feeding tube and head components (spring, jaws, etc.) for damage

Routine Maintenance (Continued)

Greasing the Telescopic Device with 1 and 2 Sensors:

See Figure 33

Grease the spline shaft (M) with molybdenum disulfide based grease.

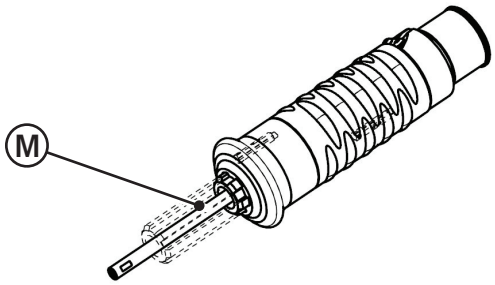

Figure 33

Checking the Sensor of the Telescopic Device with 1 and 2 Sensors:

See Figure 34

Unscrew the bell-shaped cover (C) to uncover the sensor (S1)

IMPORTANT
Make sure the LED on the sensor comes on when the spline shaft is fully extracted and goes off when the shaft is fully retracted.
If this does not happen, contact ASG.

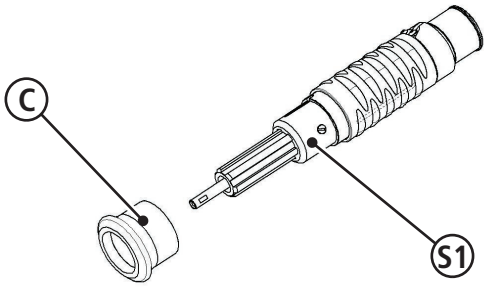

Figure 34

Routine Maintenance (Continued)

Checking the Sensor of the Telescopic Device with 2 Sensors

See Figure 35

Unscrew the bell-shaped cover (C) to uncover the sensor (S1). Unscrew the hand grip (H) with the allen wrench supplied, to gain access to the second sensor (S2). Pull off the hand grip and retract the telescopic section making sure that as it is moving, the depth sensor comes on. If necessary, adjust the position of the sensor by loosening the dowel.

IMPORTANT:
If the depth sensor's LED does not come on, contact ASG.

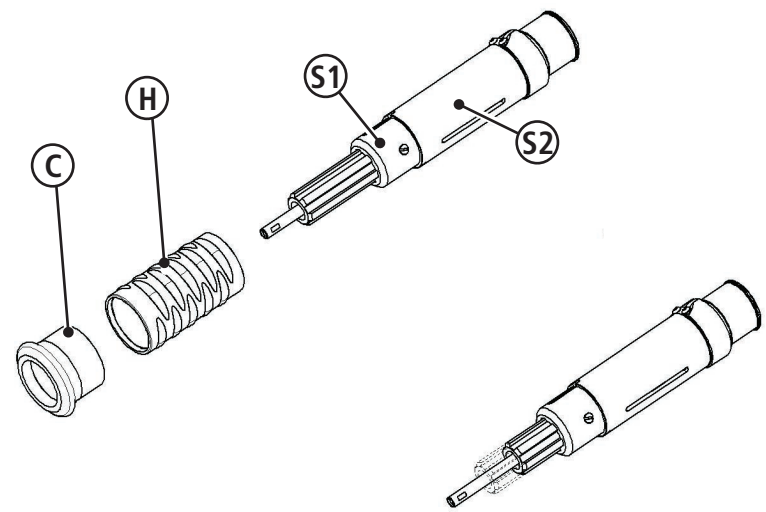

Figure 35

Extra-Duty Maintenance

IMPORTANT:
Maintenance of the machine must be carried out in compliance with the safety rules in force.

All maintenance must be made with the machine isolated from the electricity and compressed air supplies.

NOTE:
Routine and extra-duty maintenance must be performed by qualified and trained technical staff.

Extra-Duty Maintenance (Continued)

Replacing the Tube

IMPORTANT:
Maintenance of the machine must be carried out in compliance with the safety rules in force.

All maintenance must be made with the machine isolated from the power supply (unplugged) and compressed air supply lines (manual slide valve closed).

Press the tightening cycle start lever to use up all air still inside the tool.

NOTE:
Use only spare parts supplied by ASG.

See Figure 36

Should it be necessary to replace the tube of the tightening system, proceed as follows:

- Remove the side guard on the right hand side (C) in Figure 36 (looking from the operator's station); this involves pressing on the rear of the guard and sliding it outwards, then pulling the guard backwards so that the front pins slip out
- Take note of the position of the cable before removal
- Remove the tube (Ts) from the feeding unit fitting
- Detach the tube from the tightening head (Ta)
- Detach the tube from the rear cable lug (P)
- Remove the fastening elements
- Remove the old tube
- Secure the tube to the tightening head (Ta)
- Insert the tube through the rear cable lug (P) and secure in place
- Make sure that the tube is correctly installed. Avoid sharp bends that may prevent a correct flow of screws
- Refit all fastening elements
- Connect the tube to the head (Ta) and make sure it is properly inserted
- Refit the guard previously removed

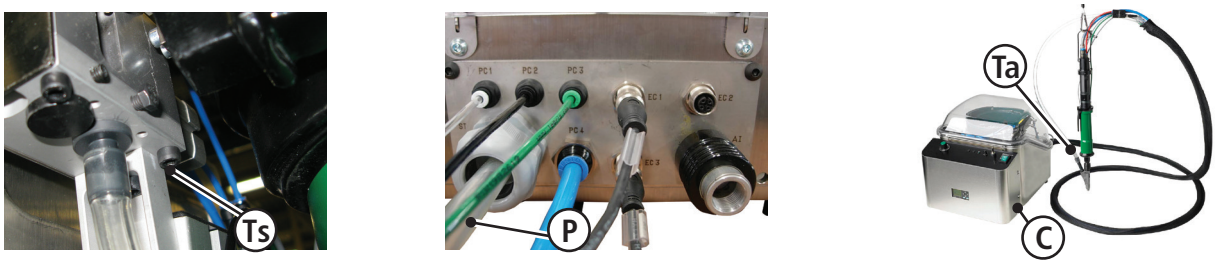

Figure 36

Extra-Duty Maintenance (Continued)

Selector Maintenance

See Figure 37

Every 500,000 cycles, use a brush to grease the parts indicated below with grease containing graphite:

A. (2) Cam Fastening Screws

B. Cam

C. Selector Body Sliding Rails (slide the selector body along the greased guide rails by hand to distribute the grease evenly)

D. Selector Key

E. (2) Guard Fastening Screws

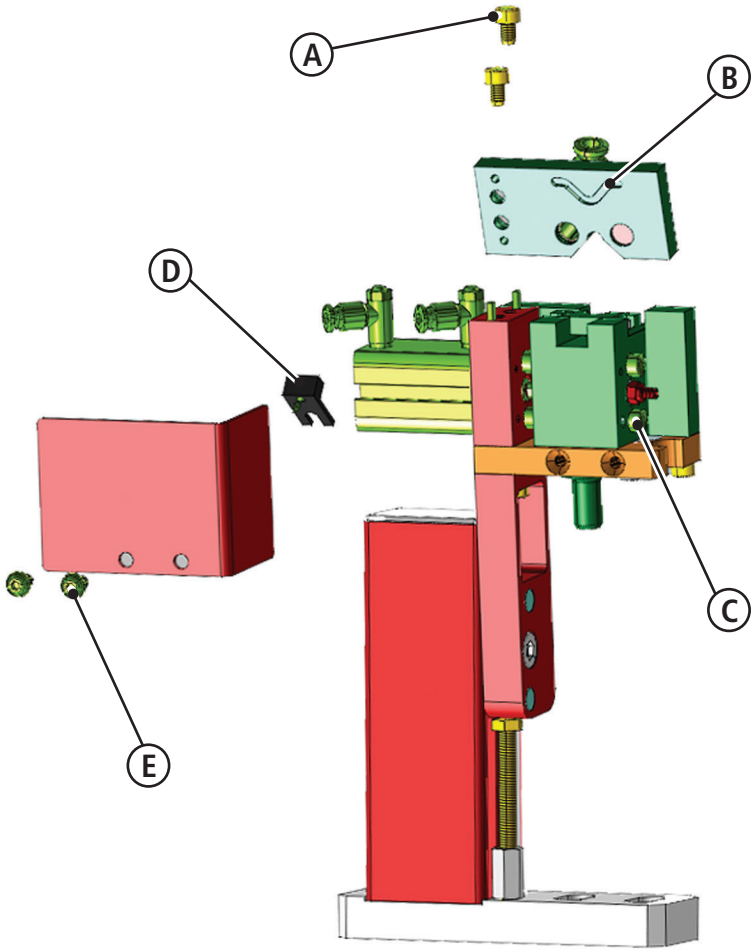

Figure 37

Extra-Duty Maintenance (Continued)

See Figure 38

Selector Maintenance (Continued)

Selector Removal Sequence

- Using a 3mm allen wrench, loosen the guard (F) by removing screws (E)
- Using a 4mm allen wrench, remove screws (A) to loosen the cam (B)
- Slide the cam up and off, releasing it from the relevant locating pins

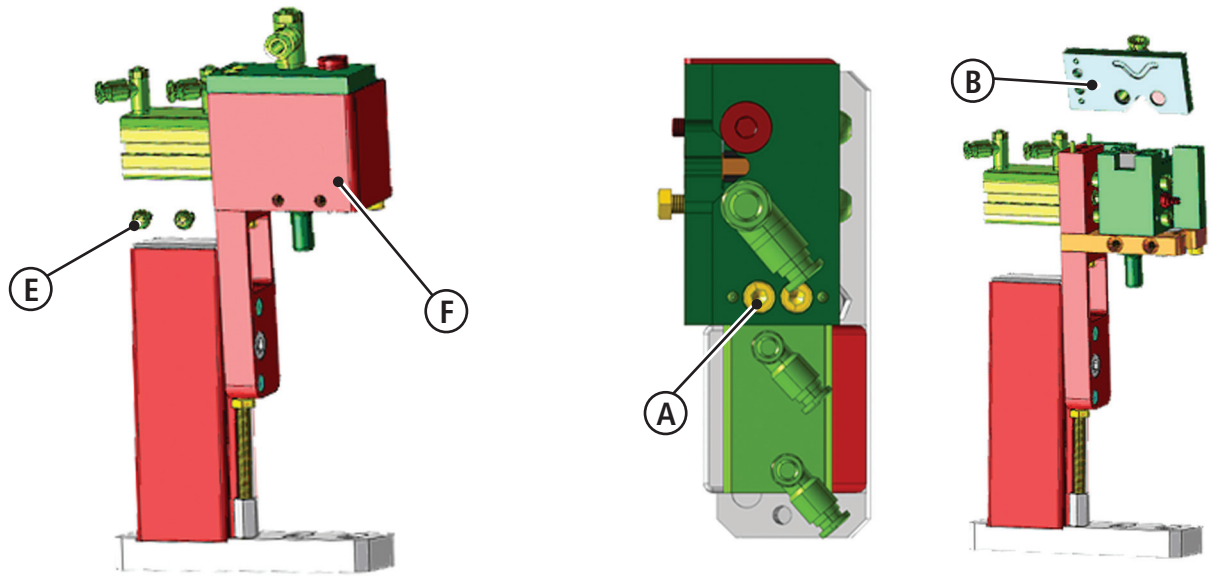

Figure 38

See Figure 39

- Remove the selector's key (D), paying attention not to pull out the pulling pin

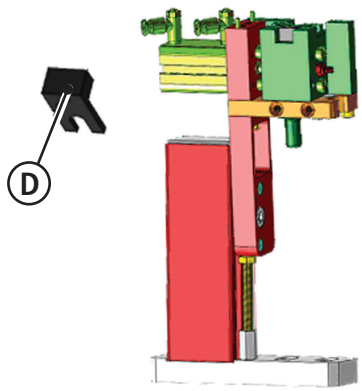

Figure 39

Extra-Duty Maintenance (Continued)

Selector Maintenance (Continued)

See Figure 40

Removing the Feeding Bushing

- Using a 10mm open-end spanner, loosen the screw (A) fastening the feeding bushing (B) by a half turn
- Remove the feeding bushing (B) by pulling it downwards

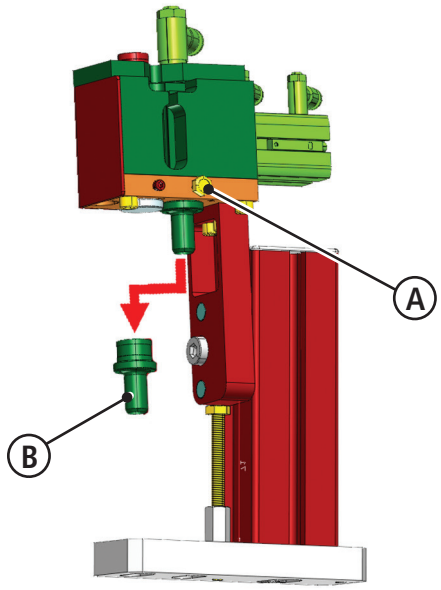

Figure 40

Maintenance

Troubleshooting

Problem	Cause	Solution
Nothing happens when the air is turned on	There is no pressure in the line	Check the compressors or supply tube
	The supply tube is not connected	Connect the supply tube
	The air inlet slider valve has not been activated	Activate the slider valve
The machine is plugged in but it does not work	A line switch is open	Make sure the switch is closed
	The switch on the switchboard is OFF (0).	Press the switch until you hear it click: the light on the switch will come on
	One or more fuses inside the board are out of order	Pull out the plug, open the board and replace any faulty fuses
	One or more cables have come loose	* Pull out the plug, open the board and check

Device Troubleshooting

Problem	Cause	Solution
Telescopic Device with 1 and 2 Sensors		
Slow movements of the device	The springs return capacity is impaired	Grease the spline shaft. if the problem remains, contact ASG
The screwdriver does not stop at the established depth (Telescopic Device with 2 Sensors only)	You have chosen the wrong program	Using the selector with key on the switchboard, select another program
	The screwdriver reaches maximum torque before reaching the established depth	Increase closing torque of the tool
Forward Stroke Device		
Jamming or jerking	Wrong tube installation	Make sure the connections correspond to the indications on the pneumatic diagram
	Wrong regulation of the pressure regulator	Correct the regulation of the pressure regulator
	Damaged or malfunctioning sensors	Replace the sensors

Section 8: Electrical Diagrams

Main Power Supply

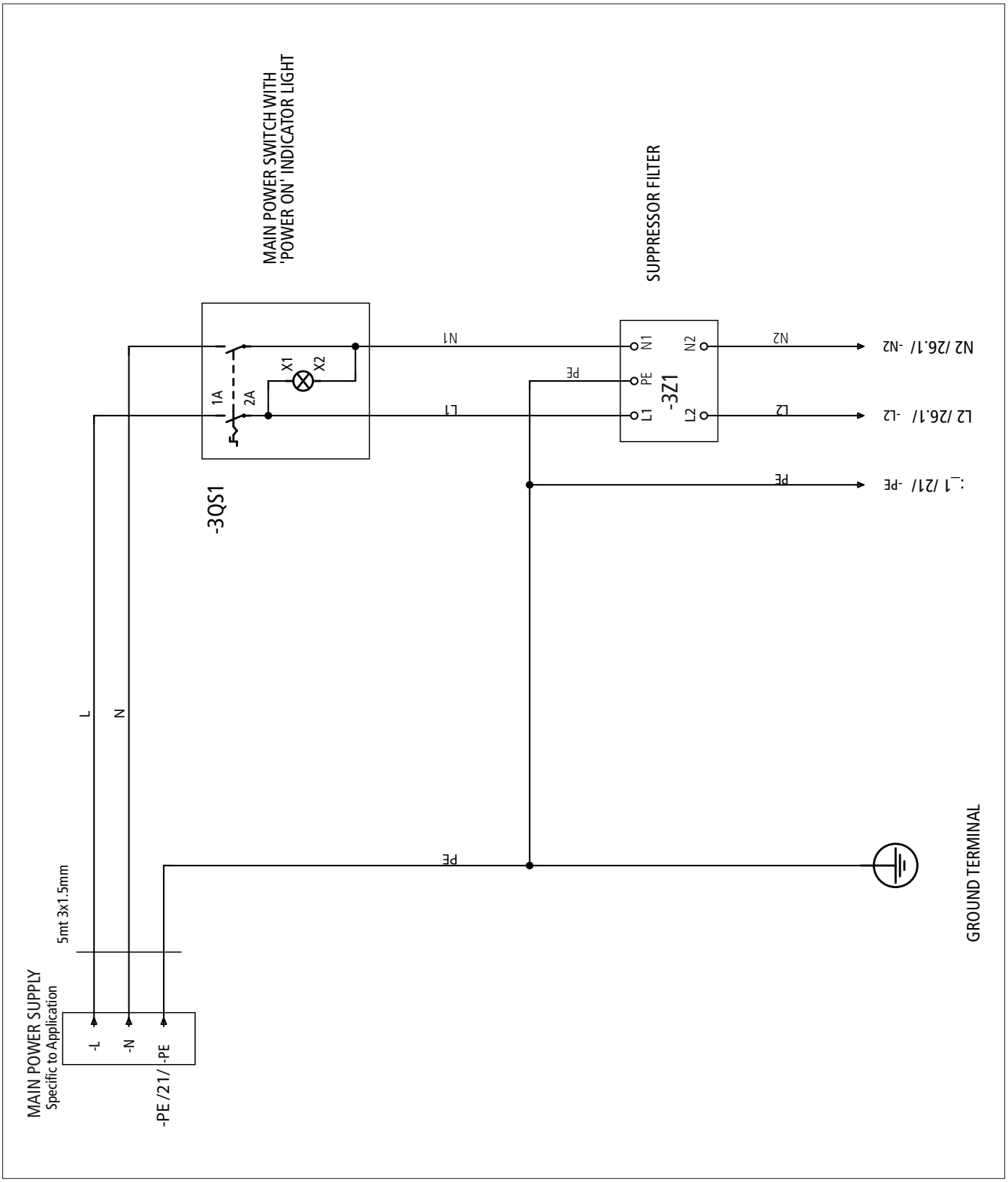

Electrical Diagrams

Power Supply

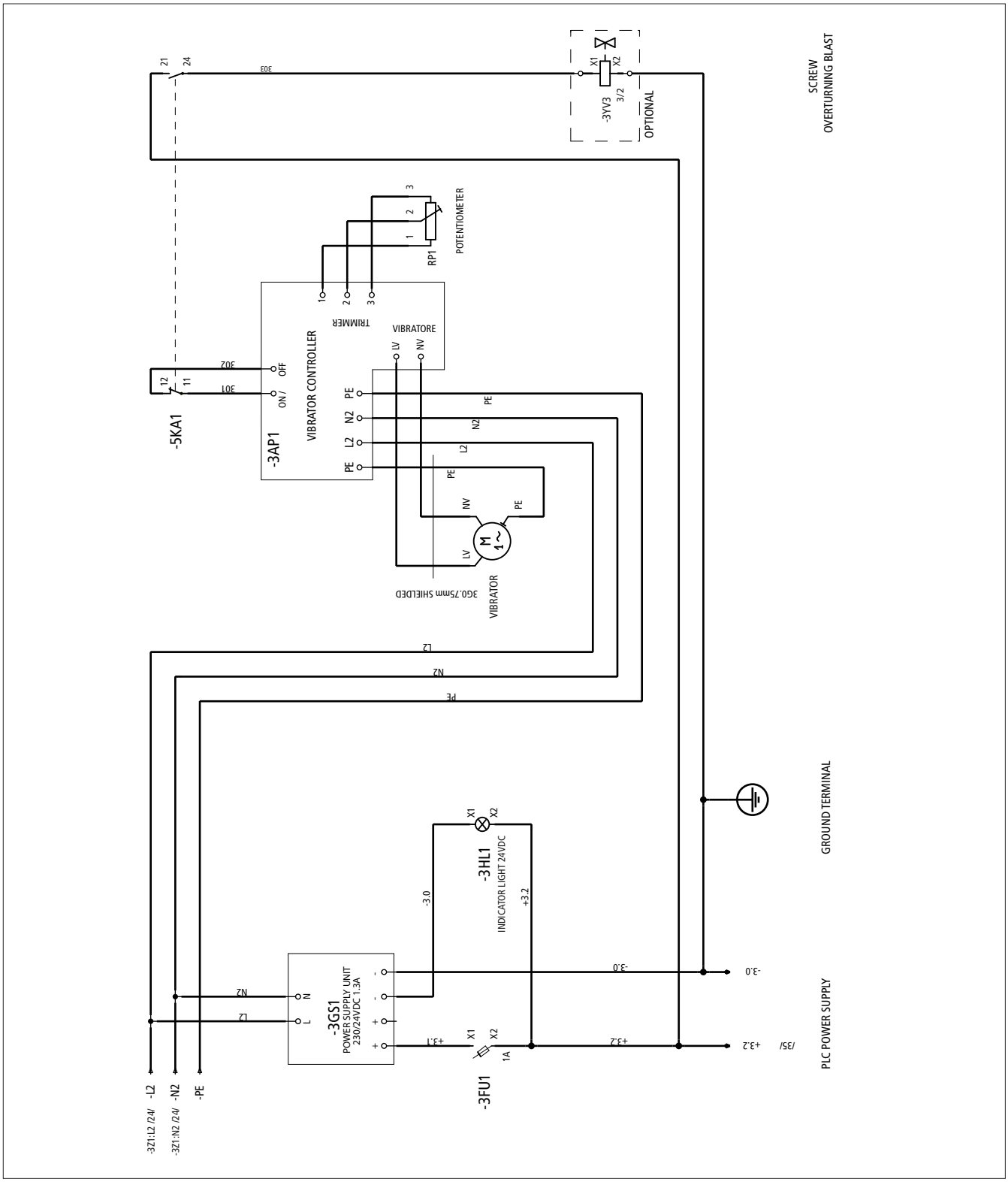

Electrical Diagrams

PLC Power Supply

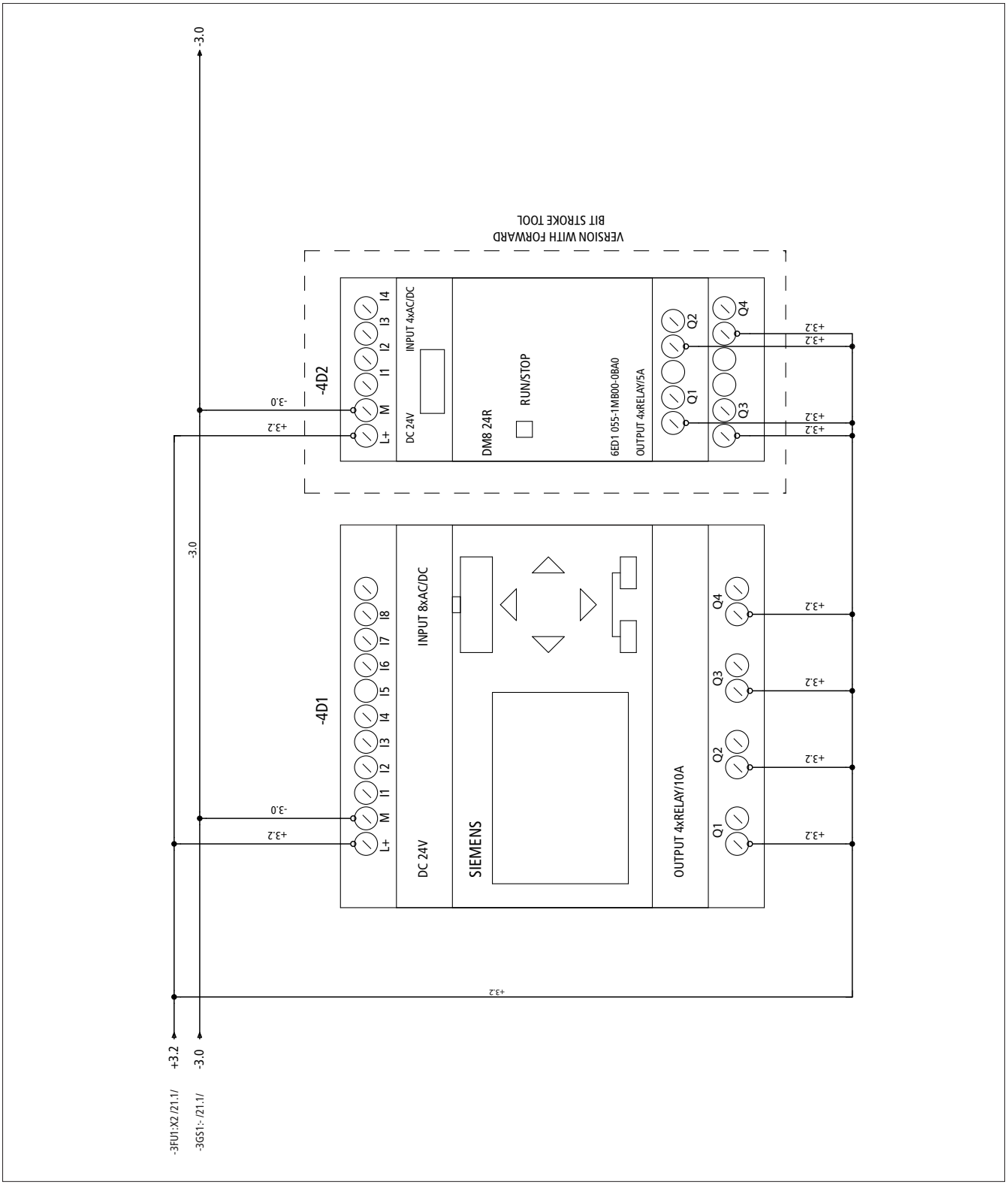

Electrical Diagrams

PLC Input

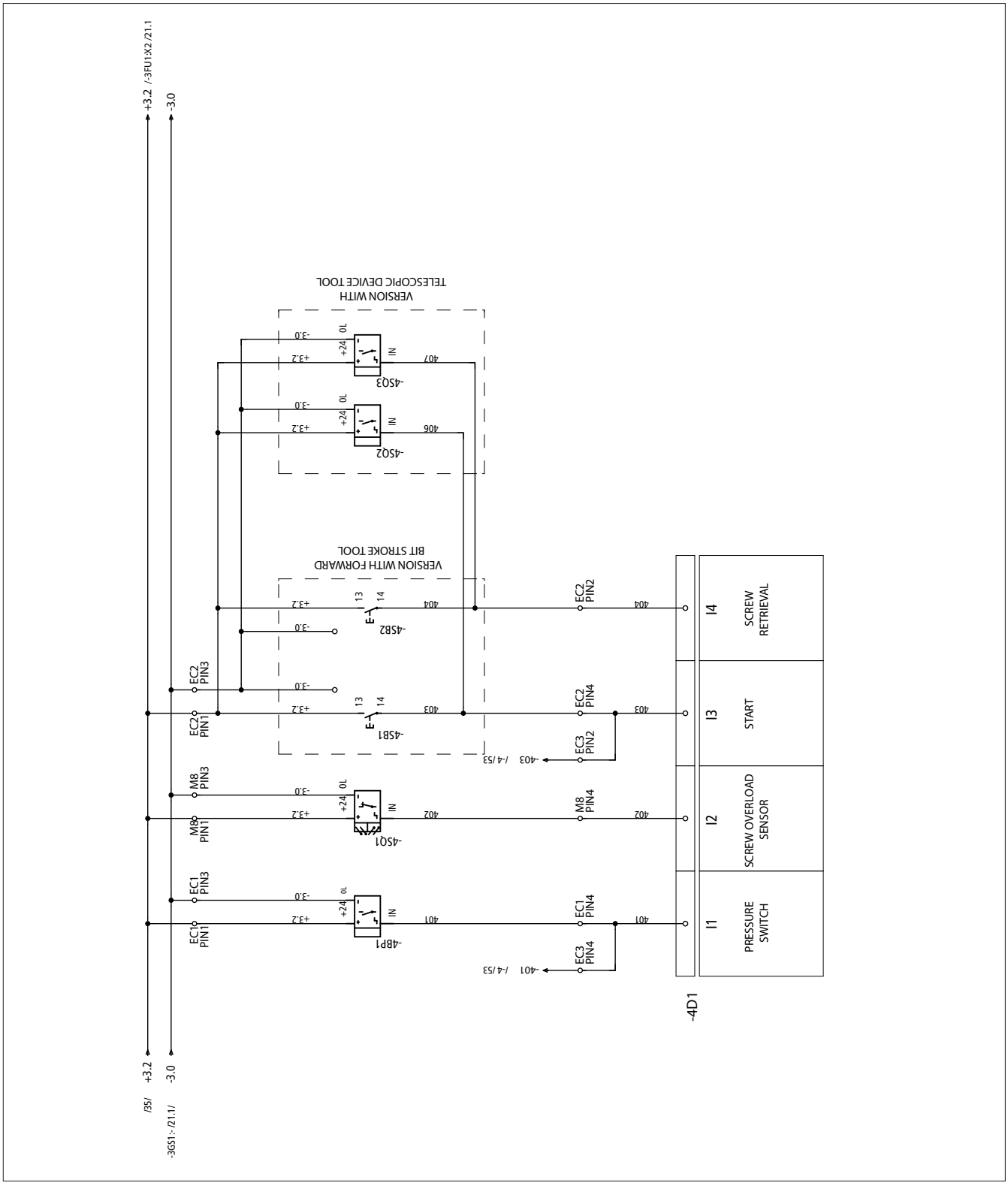

Electrical Diagrams

PLC Input

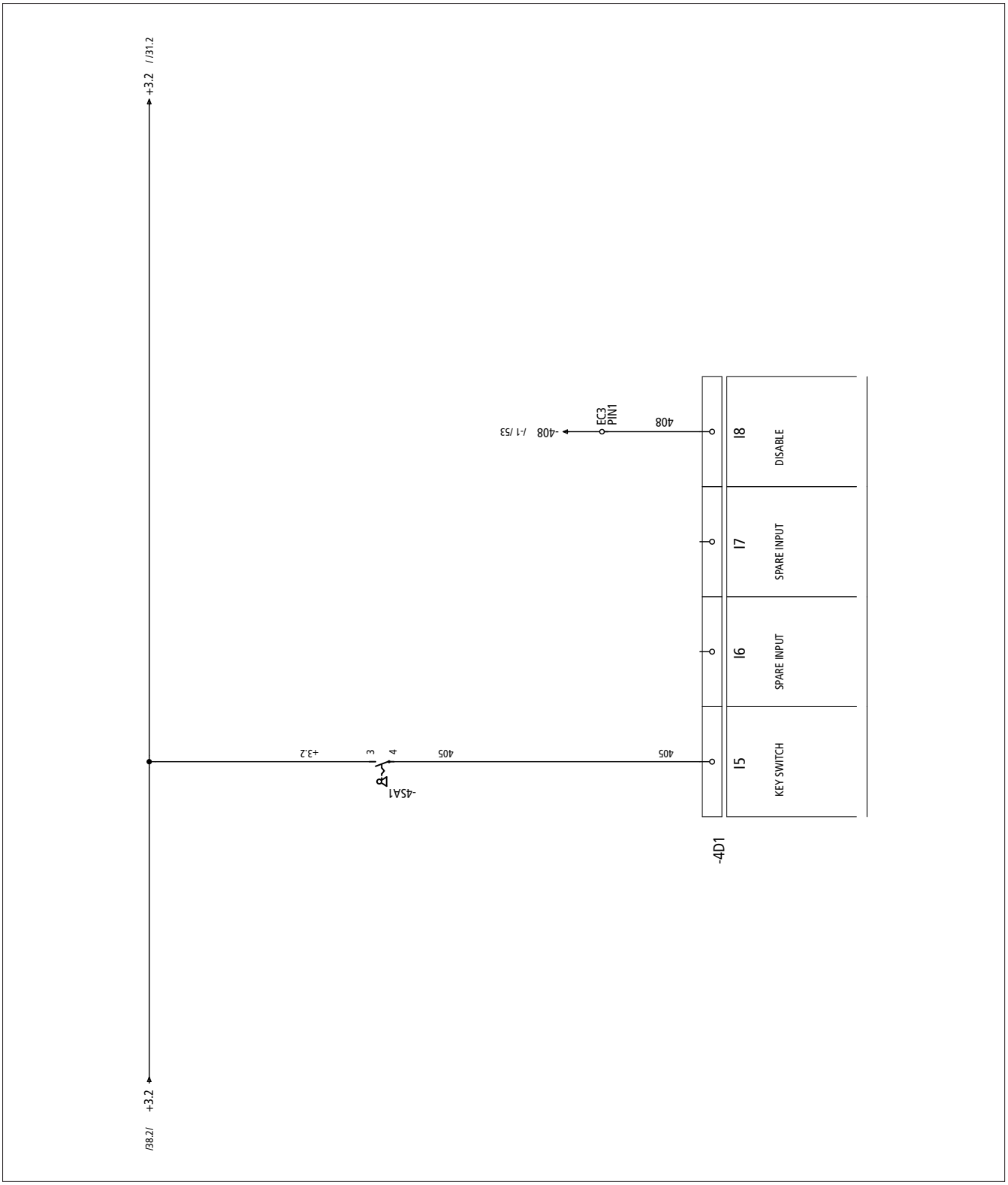

Electrical Diagrams

PLC Output

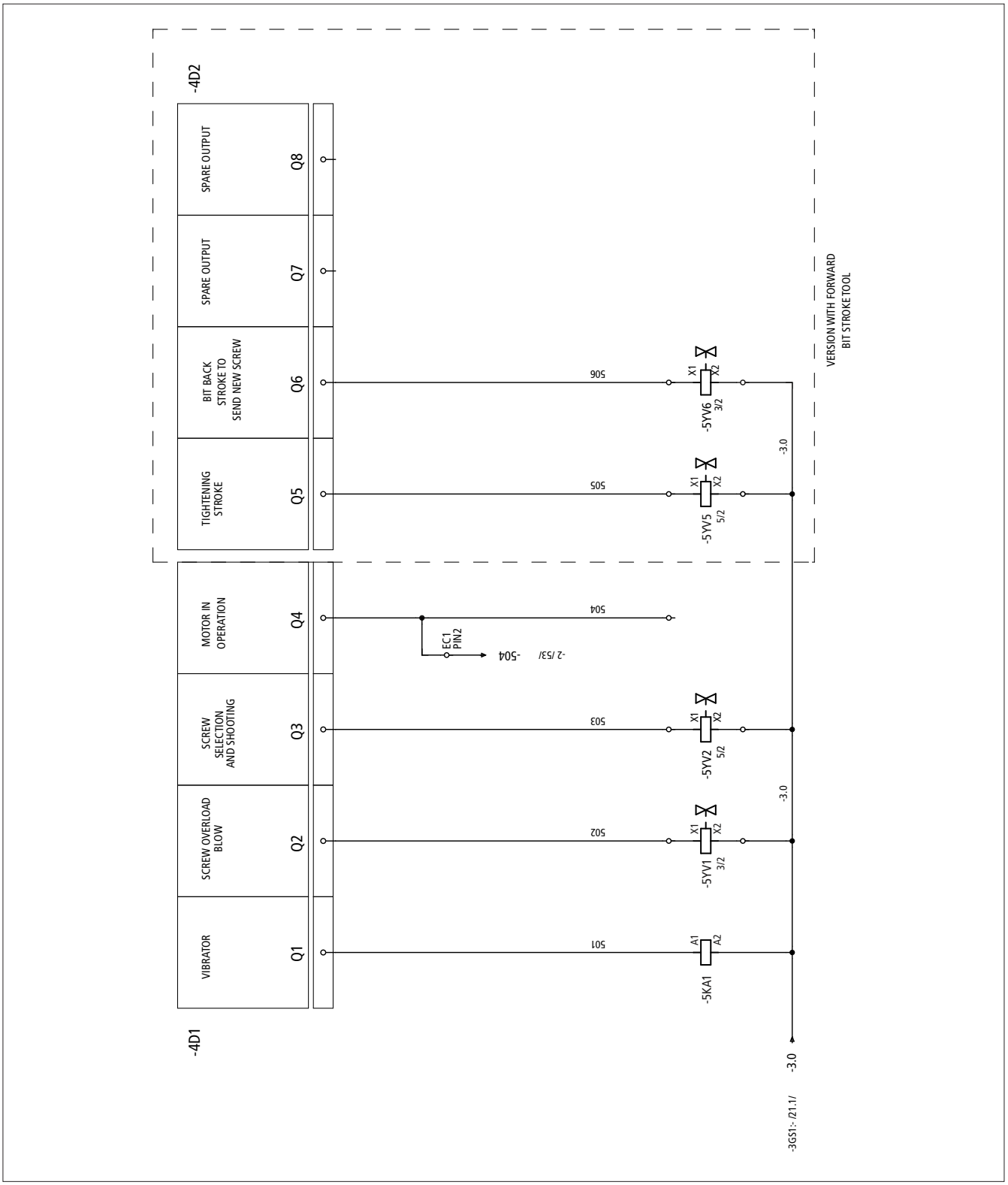

Electrical Diagrams

Connections

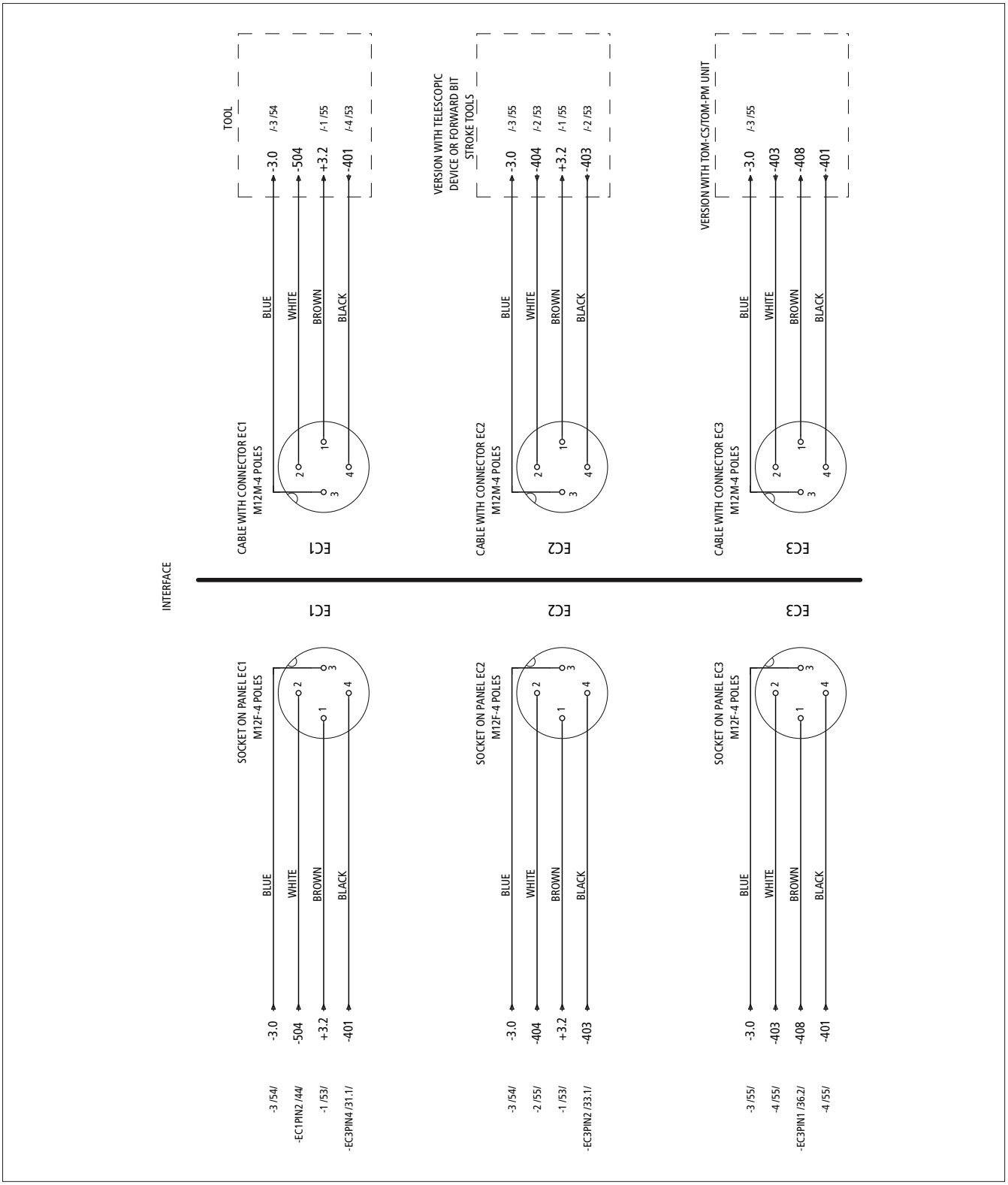

Electrical Diagrams

EC1 Cable

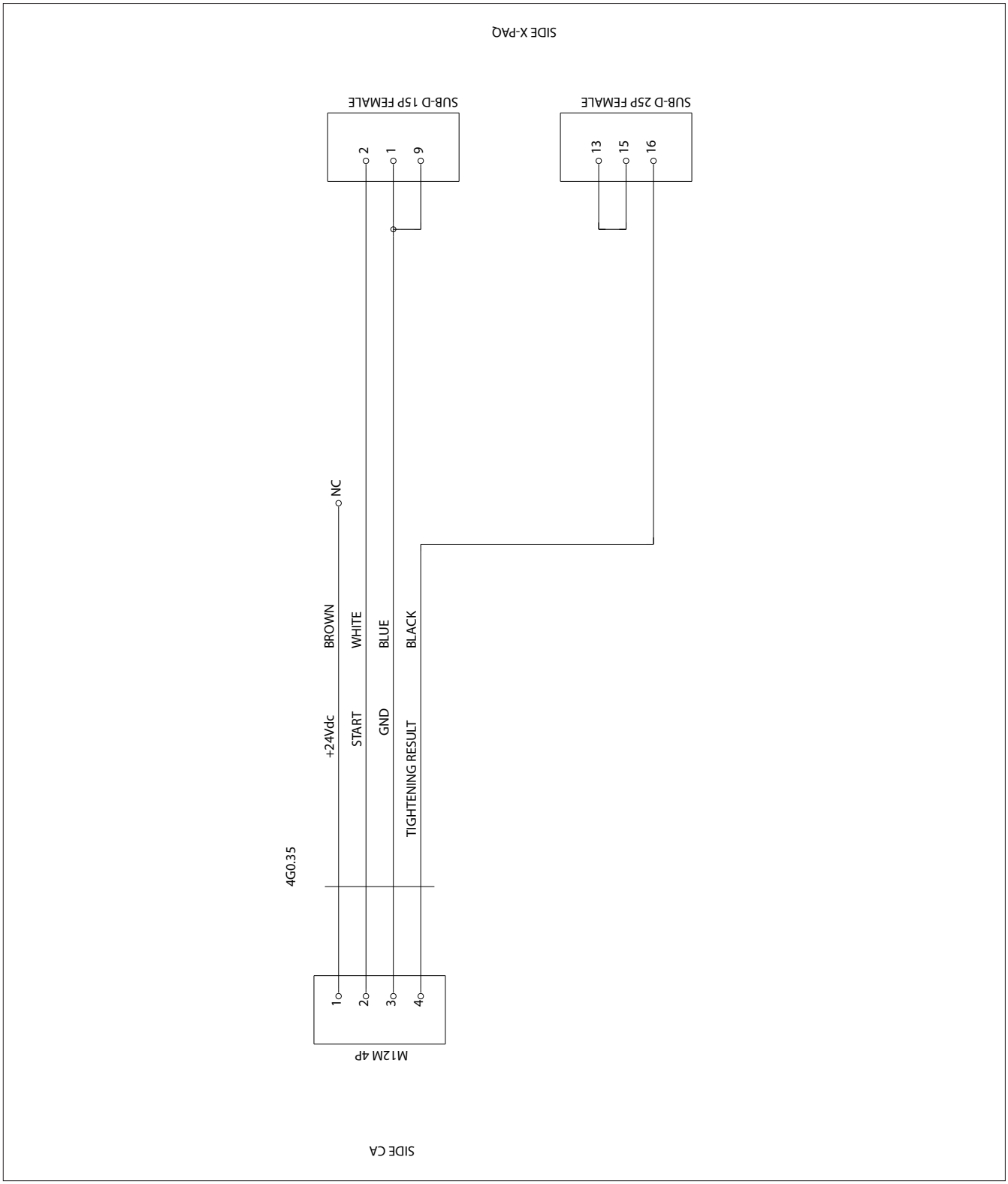

Section 9: Pneumatic Diagrams

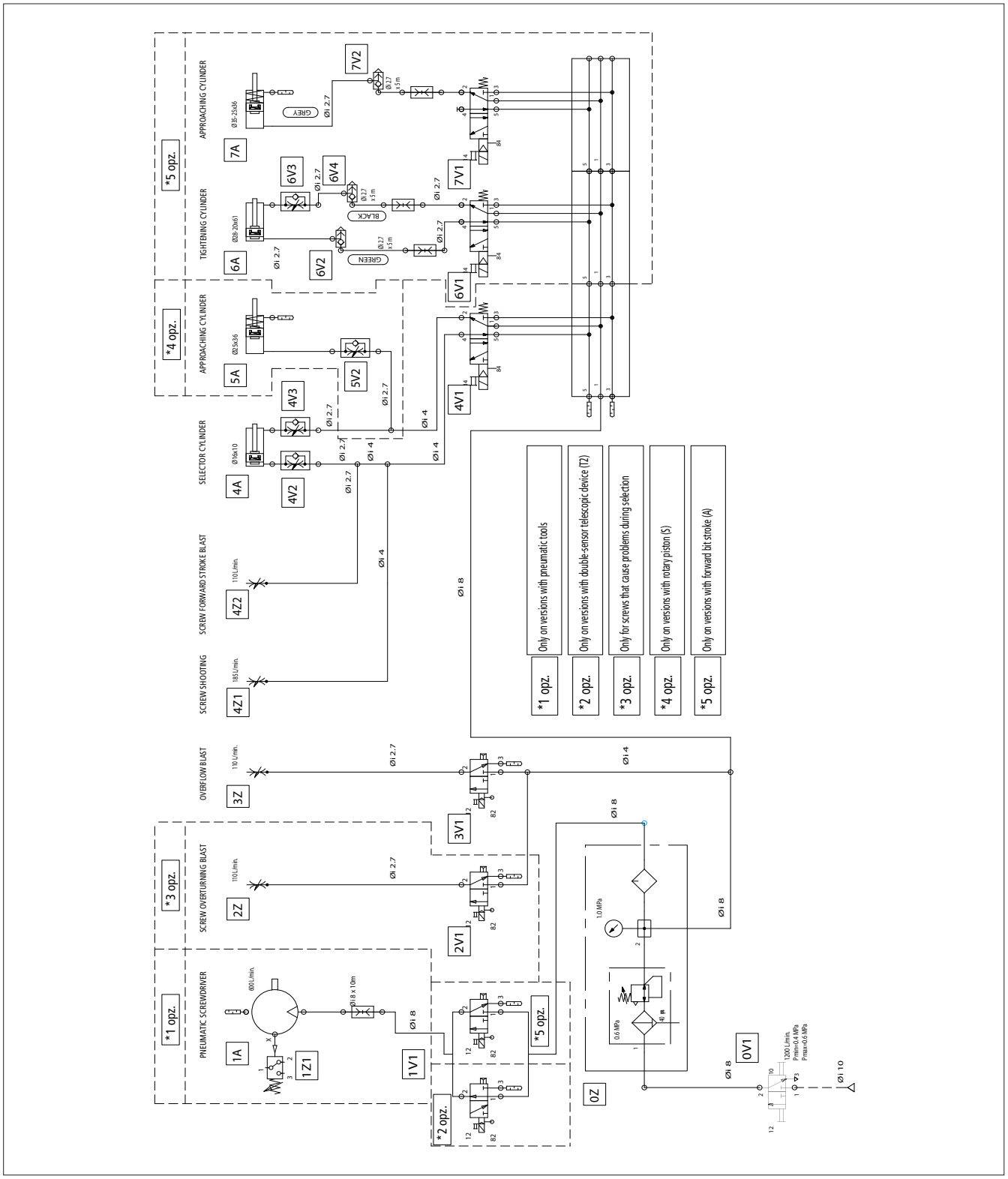

(This page left intentionally blank)

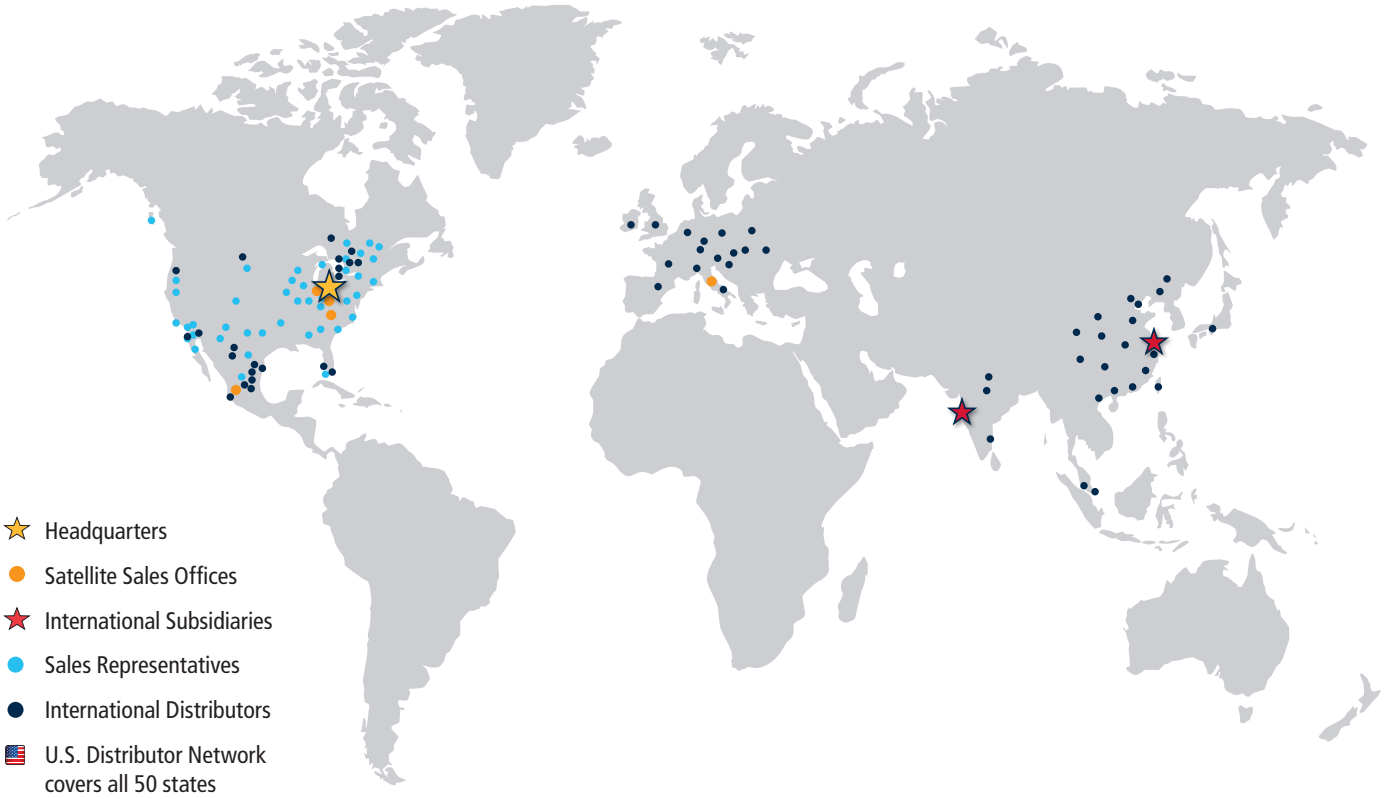

Our footprint covers the globe!

Global Support

ASG employs a team of technical experts to provide support, repair, calibration and preventative maintenance services. We welcome the opportunity to provide assistance by telephone or online chat Monday through Friday, 8 a.m. to 5 p.m. (U.S. Eastern Time) excluding holidays.

ASG maintains subsidiaries in Shanghai, China and Mumbai, India, sales office in Mexico and Europe to provide direct support to our international customers. We work together with our global Field Sales Representative and Distributor Network to help customers standardize their assembly equipment and processes around the world.

Distributor:

ASG™
Assembly · Industrial · Precision Fastening · Automation

Products and Solutions for Assembly

ASG USA Headquarters
Jergens Way, 15700 S. Waterloo Road
Cleveland, OH 44110-3898 USA
Phone: (216) 486-6163
Toll-free USA: (888) 486-6163
Fax: (216) 481-4519
Email: asginfo@asg-jergens.com

ASG China Subsidiary
Unit 301 Level 3, Block A
A-REIT City at Jinqiao, 200 Jinsu Road,
Shanghai, Pudong 201206 CHINA
Phone: +86 21 58209175
Fax: +86 21 58353696
Email: rafael.qi@asg-jergens.com

ASG India Subsidiary
B-607, Mahaavir Icon,
Plot No. 89, Sector 15, C.B.D. Belapur
Navi Mumbai-400 614, Maharastra INDIA
Mobile: +91 9833404986
Email: pmk@asg-jergens.com